AMATEUR RADIO

73

December 1962

A Jolly

40¢

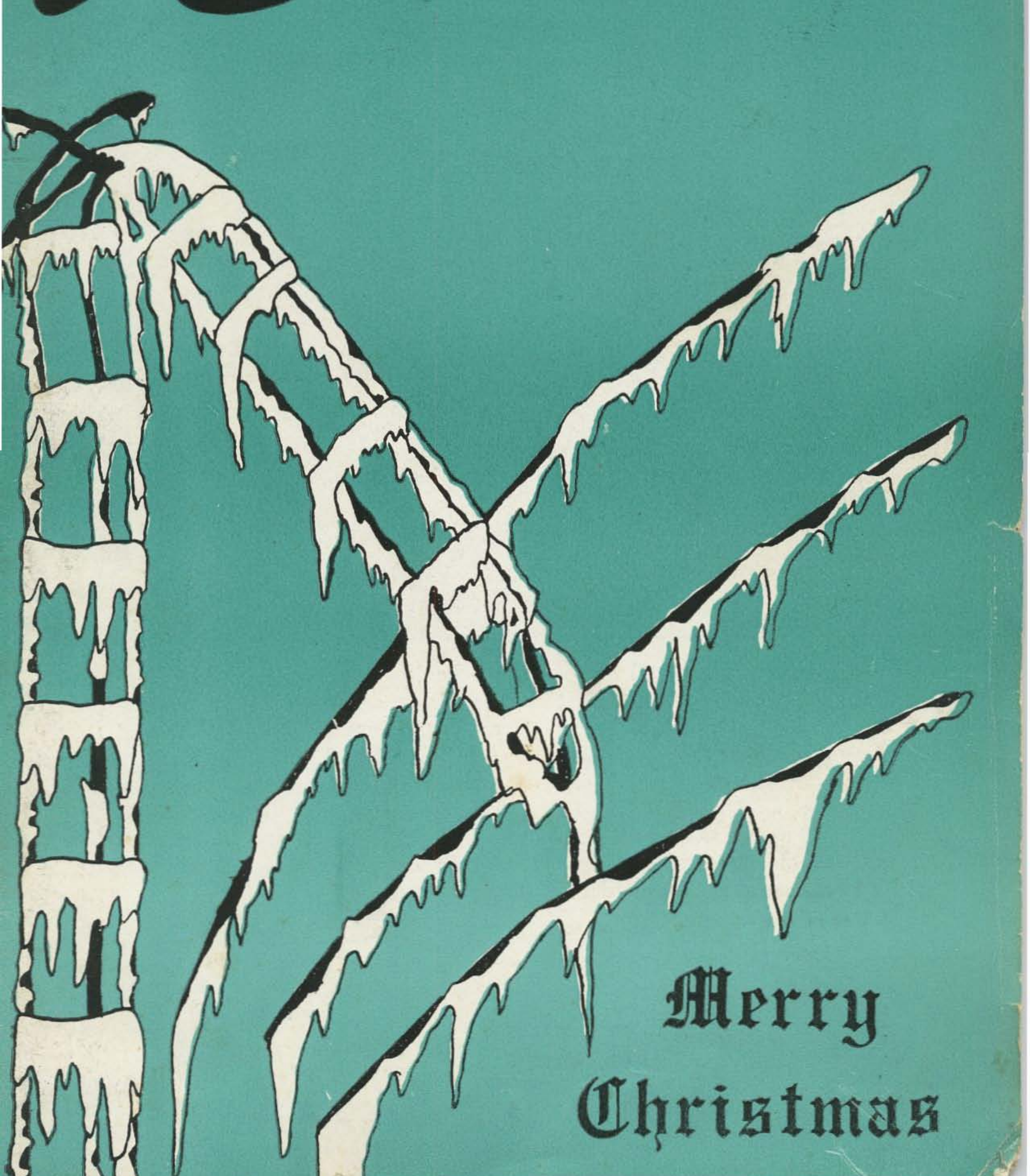

Merry

Christmas

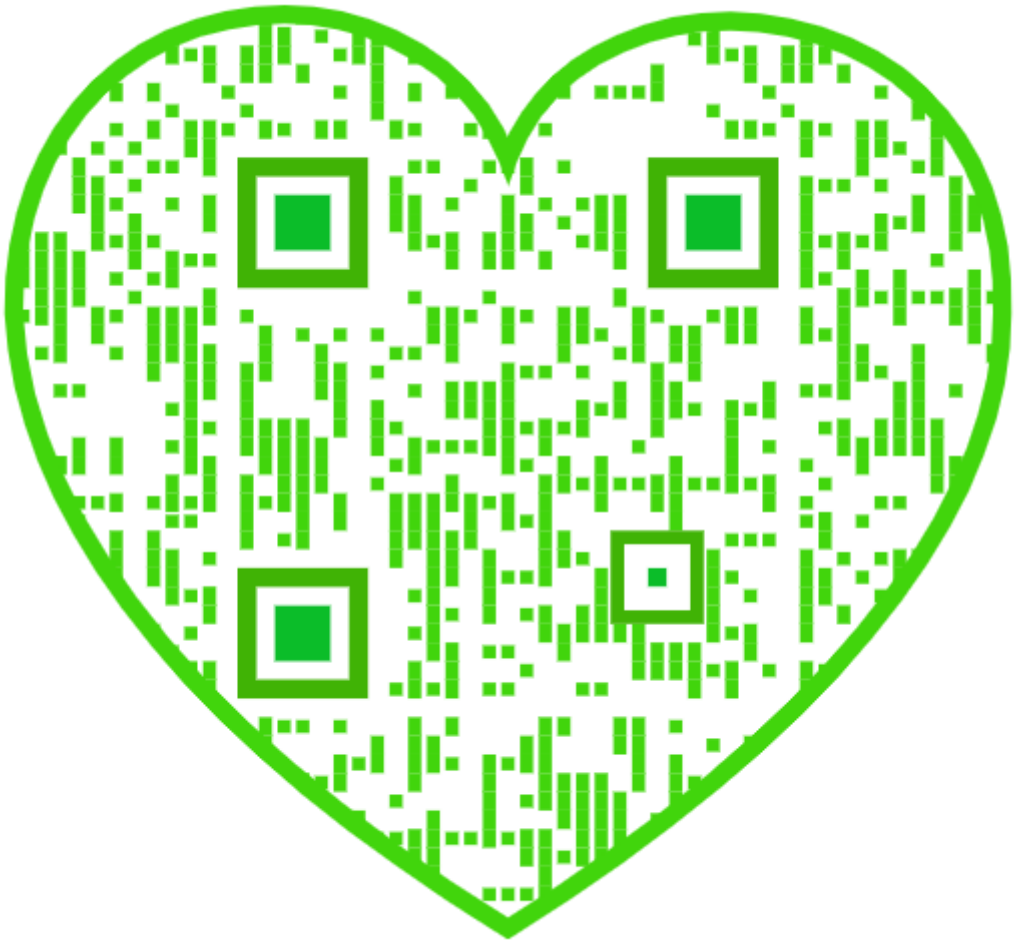

New standard of performance for AM, CW, SSB reception

- Band-pass filter front end—equivalent of four tuned circuits preceding 1st mixer.
- Crystal-controlled high frequency oscillator.
- 5 steps of selectivity plus Hallicrafters' exclusive upper/lower sideband selection.
- Linear CTO, direct reading in kc.

SX-115
RECEIVER

The experienced amateur will immediately recognize in the SX-115 a first rate engineering triumph that creates an *entirely new class* of deluxe receiver.

Frequency coverage: Nine 500-kc segments covering 3.5–4.0 mc.; 7.0–7.5 mc.; 14.0–14.5 mc.; 21–21.5 mc.; 28.0–30.0 mc.; (4 segments); and WWV.

Additional features: Highest order of mechanical and electrical stability; linear tuning; constant tuning rate; separate noise limiters for SSB/CW and AM; dual loop AVC; spurious signal and image rejection better than 60 db. down; sensitivity less than one microvolt; perfect match for Hallicrafters HT-33 and HT-32 series exciters and transmitters.

the new ideas in communications are born at...

hallicrafters

5th and Kostner Aves. Chicago 24, Ill.

Overseas Sales: Contact Hallicrafters Commercial Products Division
Canada: Gould Sales Co., Montreal, P.Q.

73

Magazine

Wayne Grean, W2NSD

Editor, etcetera

December, 1962

Vol. XIII, No. 1

Cover: W1MEL

Two Meter VFO W6TKA 6
Very stable and uses one tube. Dandy bandspread.

Modifying the Sixer K4ZQQ 9
For a 50% power increase.

Modifying the HE-45 ..... WA2INM 10
Improving the modulation & power output meter for this nice rig.

The Irving Hiverter 50 ..... Staff 12
Six meter SSB converter tested at HQ by W1MEL. Works.

Alternators K8ERV 16
With mobile SSB coming at us in a rush we will be needing these.

432 mc Antenna Tuner W1TQZ 18
Pictorial article.

Auto Analyzer ..... Henry 20
Not very hammy. Tachometer, dwell angle meter, battery VM, temp. indicator.

Coaxial Baluns WA2INM 26
Open wire is the lowest loss, but how do we get from coax to open line?

Selectivity Plus W6EUM 28
The CW man sometimes goes to great lengths for selectivity.

The Heath HR-20 ..... W4WKM 36
73 tests the Heath mobile receiver.

AM Oscilloscope Patterns ..... WϕOPA 44
You've been wondering what your scope was trying to tell you?

Briefcase Twins W2TBZ 50
Complete portable CW station.

The Heath Warrior W6EUM 60
Full kilowatt linear amplifier by Heath.

Joe's Other World XYL-G3NMR 66
Fiction.

Transistorized Squelch W1TUW 74
Squelch is very handy and this circuit is so simple you have no excuse.

The Waters Q-Notch Filter K2CM 74
For the KWM and 75S Collins owners that want something better.

The R-45/ARR-7 ..... W5UOZ 86
This is practically an SX-28. Surplus conversion.

Constant Voltage Power Supply W4WKM 92
A real gem is available in some of those old TV sets.

Clipper 19
Letters 19, 43, 46, 65, 70
Rate of Change 35
New Products 72, 81
Prize Winners 85

73 Magazine is published monthly by 73, Inc., Peterborough, N. H. The phone number is 603-924-3873. Subscription rates are still abysmally low at $3.50 for one year, $6.50 for two years, and $9.00 for three years in North American and U.S. possessions. Foreign subscriptions are $4.00 per year. Second class postage is paid at Peterborough, New Hampshire and at additional mailing offices. Printed in the U.S.A.

Entire contents copyright 1962 by 73, Inc.

Postmaster: please send form 3579 to 73 Magazine, Peterborough, New Hampshire.

Readers should stop reading the fine print and stick to the articles and editorial.

de W2NSD/1

Never Say Die

The Institute

Many interesting suggestions for activities of the Institute of Amateur Radio have accompanied the membership applications. It is entirely possible that the Institute may take a rather active part in the encouraging of some of the more obscure phases of amateur radio such as wide-band FM, Ham-TV, amateur repeaters and the like. We are open for further suggestions.

One of the first projects of the Institute is the projected Ham Flight to Europe which is beginning to take shape. We are trying to arrange a minimum cost three week trip which will include London, Paris, Berlin, Geneva and Rome. This would give us about four days in each city, which would allow us time in each city to meet the local hams in a big hamfest, see the city and visit a few local amateurs. We hope to be able to fly you over on a jet, take you from city to city, take care of the hotel bills and many of the meals, all for around $500. As we talk further with the airlines we will find out how far off we are.

London seemed like the most promising first stop since the language can be learned in a few hours, at least well enough to make do. This is one of the most wonderful places in the world to shop for men's clothes . . . and the prices are quite reasonable.

Next stop Paris. Bring lots of film. Virginia will have some hints for the XYL's on shopping in Paris. I'll give you the low down on some magnificent but inexpensive restaurants. You won't want to miss one of the most fabulous night club spectaculars in the world: the Lido. This is heady stuff for ministers and scout masters, but everyone else should have something to remember for life. We'll try to have a first class hamfest here, too, so you can meet the French amateurs and perhaps talk one of them into driving you through Paris in his deux-cheveux. You won't forget that, either.

Geneva, Switzerland, will probably be our next stop. I hope you and the XYL saved some money back in Paris for you will find one of the most international shopping areas in Geneva. Not far away is Mt. Blanc where you can enjoy one of the most exciting tramway rides in the world.

Rome! You'll love it. Don't drink from the fountains . . . I tried it. Rent a Vespa and see all of Rome for yourself. Wait'll you try real Italian ice cream . . . mmm. I'll have some hints on restaurants here, too. Stand by for one of the best meals you've ever had.

Last of all, if we can manage it, will be Berlin. We may have to settle for Frankfort. Berlin is an experience . . . you can visit the Eastern zone and see for yourself what a dead city is like. The department stores of Berlin are overflowing with marvelous merchandise selling at fractions of what we would expect. The XYL's will see some beautiful dresses here . . . and furs. You may be more interested in rounding out that, ahem . . . collection of foreign slides.

Virginia and I are convinced that everyone should make plans to visit Europe, no matter how difficult it may be. Once you make up your mind the only problem is how to manage . . . and somehow you do. Even if you have to go now and pay later it is well worth it. This, essentially, is what we did when we went over in April . . . and we don't regret one minute of it!

Since it is necessary for you to have been a member of a club for at least six months before you can accompany that club on a charter flight it would be prudent, if you have any

Application for Charter Membership in the Institute of Amateur Radio
(Valid only if postmarked before January 1, 1963)

Name ..... Call: .....(must be licensed)

Address .....

City ..... Zone..... State..... County.....

Class of license: Novice Technician General Advanced Extra Conditional

Year first licensed ..... Old calls .....

Charter membership fee of $1.00 must accompany this application. This will pay dues in full until December 31, 1963.

LAFAYETTE RADIO

SMASHING VALUES! TOP DESIGN!

MADE IN U.S.A.

KT-390

STARFLITE™

90 WATT PHONE and CW TRANSMITTER KIT

COMPARE QUALITY!
COMPARE PRICE!

79.50

NO MONEY DOWN

● 90 Watts Phone or CW on 80 Thru 10 Meters ● Built-in 3-Section Low-Pass Filter ● Clear, Chirpless Grid Block Keying

Dollar for dollar you can't beat this new Lafayette **Starflite** transmitter. Easy to build and operate, it glistens with quality and performance all-over. Features in addition to those listed above: 5 crystal positions and provisions for external, VFO, illuminated edgewise panel meter and pin-net work output for proper antenna match. Buy one now — we know you'll be satisfied with it.

THE LAFAYETTE HE-30

Professional Quality Communications Receiver

99.95

NO MONEY DOWN

● TUNES 550 KCS TO 30 MCS IN FOUR BANDS ● BUILT-IN Q-MULTIPLIER FOR CROWDED PHONE OPERATION ● CALIBRATED ELECTRICAL BANDSPREAD ON AMATEUR BANDS 80 THRU 10 METERS ● STABLE OSCILLATOR AND BFO FOR CLEAR CW AND SSB RECEPTION ● BUILT-IN EDGEWISE S-METER

Sensitivity is 1.0 microvolt for 10 db, Signal to Noise ratio. Selectivity is ± 0.8 KCS at —6db with Q-MULTIPLIER. TUBES: 6BA6—RF Amp, 6BE6 Mixer, 6BE6 OSC., 6AV6 Q-Multiplier—BFO, 2-6BA6 IF Amp., 6AV6 Det-AF Amp. ANL, 6AQ5-Audio output, 5Y3 Rectifier.

NEW LAFAYETTE HE-50A DELUXE 6-METER TRANSCEIVER

MADE IN U.S.A.

114.95

NO MONEY DOWN

- Highly Sensitive Superheterodyne Receiver Section for 28-29.7 Mc
- Effective Series Gate Noise Limiter
- 3-Stage, 12-Watt Transmitter with 2E26 Final
- Illuminated Panel Meter for Plate Current and "S" Readings
- Pi-Network Transmitter Output
- Built-in 117 VAC and 12 VDC Power Supplies
- Push-To-Talk Ceramic Microphone

Provides maximum convenience and flexibility in either mobile or fixed operation.

LAFAYETTE HE-45A 10-METER TRANSCEIVER

Similar to above except for 6 meter operation **114.95**

TOP VALUE COMMUNICATION RECEIVER

KT-200
in Kit Form
64.50

HE-10
79.95
WIRED AND TESTED

● SUPERHET CIRCUIT UTILIZING 8 TUBES AND RECTIFIER TUBE ● BUILT-IN "S" METER WITH ADJUSTMENT CONTROL ● FULL COVERAGE 80-10 METERS ● COVERS 455KC TO 31 MC ● VARIABLE BFO AND RF GAIN CONTROLS ● SWITCHABLE AVC AND AUTOMATIC NOISE LIMITER

The Communications Receiver that meets every amateur need—available in easy-to-assemble kit form. Signal to noise ratio is 10 db at 3.5 MC with 1.25 microvolt signal. Selectivity is —60 db at 10 kc, image reflection is —40 db at 3 MC. Tubes: 3—6BD6, 2—6BE6, 2—6AV6, 1—6AR5, 1—5Y3.

LAFAYETTE RADIO ELECTRONICS

FREE!

CUT

OUT

PASTE ON CARD

SYOSSET	JAMAICA	NEW YORK	BRONX	NEWARK
PARAMUS	PLAINFIELD	SCARSDALE	NATICK	BOSTON

LAFAYETTE RADIO DEPT. 73L-2
P.O. BOX 10, Syosset, N.Y.

Send me the FREE 388 Page 1963 Catalog 630

Name .....

Address .....

City ..... Zone..... State.....

FANTASTIC SALE
6 meter converter $6 postpaid
Complete with 6U8A tube and 49.4 mc. crystal.
Low noise figure and 1 microvolt sensitivity.
Limited quantity—send your order today.
VANGUARD ELECTRONIC LABS
Dept. H12 190-48-99th Ave. Hollis 23, N. Y.

CALL-LETTER SIGNS
ORDER your call in neat 2-inch die cut letters with base. Just right for the shack. You assemble —Letters: 3/32" showcard stock. Base: select quality wood.
Price* $1.00 *postpaid
NEW PRODUCTS
Dept. D, Box 481
Grand Haven, Mich.

for the
no-QSB QSO

***Space Raider* brings you the amazing *Polarized Diversity* Beam designed by K6CT and proven by DX men the world over. P. D.* virtually eliminates the 80% of QSB caused by polarization shift. P. D. Beams offer vastly improved forward gain, front-to-back and side rejection ratios. *Space Raider* beams priced from $44.50. Write for particulars.**

P. D. Beams Available for 20, 15, 10, 6 and 2 Meters

P.D.*
*Polarized Diversity

Space-Raider
1076 E. WALNUT ST., PASADENA, CALIF.

73 Products

MICKEY MIKER 50c

This is the first of our small booklets to come off the press. It is a complete description of the construction and operation of a little device which will measure capacity to a high degree of accuracy. This is a gadget that can be built out of most junk boxes and will forever be a handy item to have around when you are building something new or fixing something old.

SSB TRANSCEIVER SCHEMATIC $1.00

There have been many requests for a giant sized schematic of the wonderful little transceiver that appeared in the November 1961 issue of 73. This schematic comes complete with a spare issue of the magazine in case you missed it.

MRT-90 CONVERSION: 50c

This booklet gives complete conversion instructions for converting the little pack-set surplus units into a fine two meter walkie-talkie. An article appeared in 73 on this unit in the October 1961 issue.

73 Peterborugh, N. H.

idea of possibly going along on this flight, to send in your membership application to the Institute immediately. We can only take 150 maximum on the trip and date of membership will be used as a means of accepting flight reservations should there be too many. It is only necessary for the OM to join the Institute for this automatically includes the XYL.

It is not necessary to cut your magazine. Send the information from the membership application together with one dollar and your membership card will be sent. Charter Memberships are available only during 1962. The rather startling benefits of Charter Membership will be announced once it is too late for everyone else to sign up for them.

Christmas Instructions

Perhaps I should let you know that I have been promising our advertisers that you will be spending up a storm this Xmas (keep the X in X-Ma$, as they say). The only honorable thing to do, really, is buy an extra receiver or rig and try to keep me from making such rash promises again.

Actually, this Christmas thing can be used to your advantage if you are a little crafty. You can start out by grumbling about Christmas, just as you always do, and then, in a sudden flash of genius, propose their getting one big thing for you instead of the usual pile of sox, ties, shirts and slacks. How about our finally getting that really great receiver which would make all the difference in the world in the operation of the station? What can she say? If you've already packed in a new receiver in the last few months and things are still a little tender over that extravagance then you might as well shoot for one of the new transceivers. If you word it right, with just a hint of tear in the eye, I'm sure that you can get the whole family to kick in and make this Christmas one to really remember. Don't forget that people get enjoyment out of giving . . . make them happy, let them give you (with your money) something *big*.

This gambit doesn't work nearly as well during the rest of the year and you will probably find yourself bribing the XYL with a couple of new dresses or a trip to get the okay. No, take advantage of all the Christmas Spirit and use it.

Too Much

Luckily I am no longer on the mailing list of that sick California nut farm calling itself the Anti-Communist Amateur Radio Network.

(Turn to page 82)

FREE

1963 INTERNATIONAL CATALOG

INTERNATIONAL

1963 CATALOG

PRECISION MADE
CRYSTALS AND EQUIPMENT

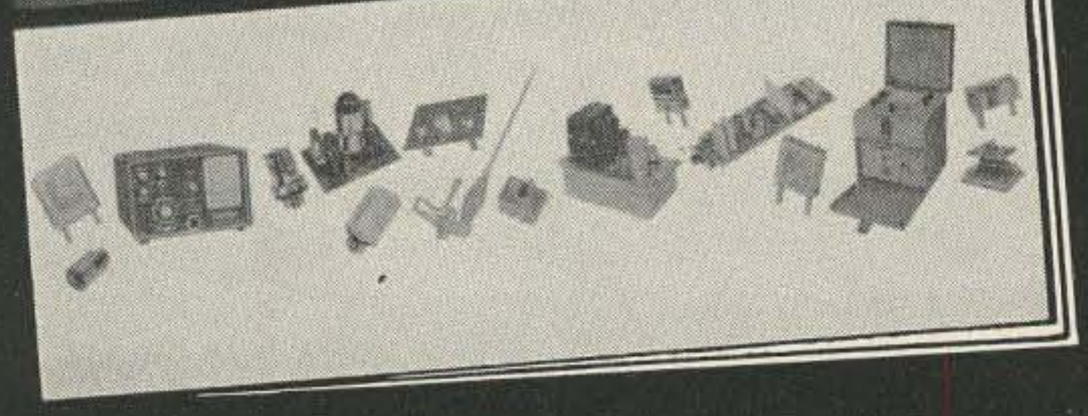

. . . your buying guide for precision radio crystals and quality electronic equipment . . .

- Transmitters
- Amateur Crystals
- Citizens Band Crystals
- Citizens Band Transceivers
- Converters
- Transistor Subassemblies
- Converters
- Power Supplies
- Antennas
- Oscillators

AMATEURS • EXPERIMENTERS • CITIZENS LICENSEES

Mail coupon today for your FREE copy of International's 1963 catalog.

INTERNATIONAL
CRYSTAL MFG. CO., INC.

18 NORTH LEE • OKLAHOMA CITY, OKLAHOMA

International Crystal Mfg. Co., Inc.
18 North Lee, Oklahoma City, Okla. 73M
Rush FREE 1963 Catalog.

Name_____
Please Print

Address_____

City_____ Zone___ State_____

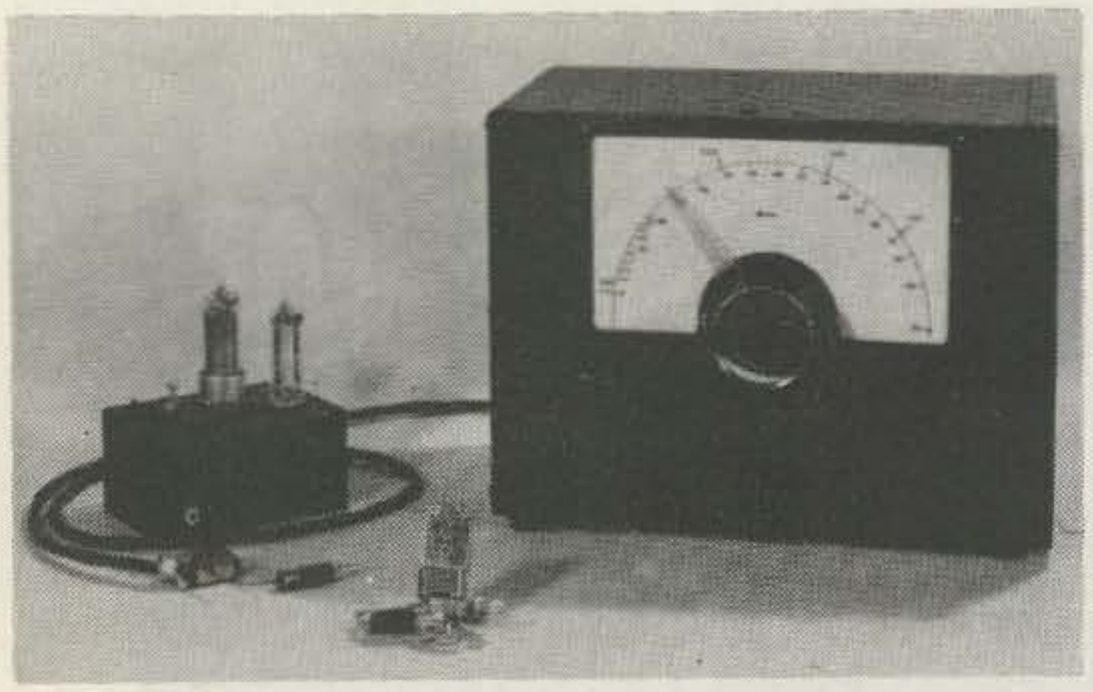

Richard Van Wickle W6TKA
643 Aurora Avenue
Santa Barbara, California

A Stable, Two Meter VFO

ALTHOUGH WE'RE USED to scooting around the lower frequencies with ease, our wings are usually clipped when we venture much above 10 meters because, as you've probably noticed, the schematics for the VHF transmitters usually specify 8 or 24 mc crystals instead of a VFO. This is basically because there are very few VFO's which have sufficient stability to make them suitable for VHF use. The VFO which I am about to describe is one of the few which you can use on two meters and have reasonable assurance that you are on the frequency you think you are on.

The higher in frequency we go, the more obvious frequency drift becomes. With a 40-meter VFO operating into a transmitter on, say, 7100 kc, a drift of one kc is relatively minor. However, using a VHF VFO with a fundamental frequency of, for example, 8100 kc, a deviation of one kc becomes 18 kc when it gets up to 145.8 mc, since the fundamental frequency is multiplied 18 times.

Variations in VFO tube plate and screen-grid voltage and temperature changes of the tuned circuit are the major causes of VFO drift, as most of us know. Shock and vibration are secondary causes. Separate the heat-generating components from the tuned circuit, and control the plate and screen-grid voltages, and you normally have a stable VFO.

Remote-tuned VFO's are certainly nothing new, yet they have been largely ignored in VHF work. The VFO shown in the photographs and in Fig. 1 has been in use at W6TKA for well over a year. Drift is minimized by regulation of the 5763 screen voltage, and by allowing the VFO to run continuously. A relay (K-1) changes the frequency slightly, by placing a 15 mmfd silver mica capacitor from the 5763 cathode to ground during stand-by periods, to eliminate VFO interference with received signals. A crystal-controlled converter and communications receiver are used at this station, and the frequency shift obtained with this system is sufficient to put the VFO signal well out of the bandpass of the receiver.

Choice of VFO operating frequency is governed by the equipment with which the VFO will be used. In the illustrated case, the VFO is used with an ARC-4, which requires 6.0 mc crystals, so the VFO operates on 6.0 mc. With an SCR-522, the VFO should operate on 8.0 mc, and with a Gonset Communicator I or II on either 8.0 mc or 24 mc.

A slight modification will usually have to be made to the equipment with which the VFO is to be used. In the case of the ARC-4, the 6V6 crystal oscillator must be modified to a buffer stage, simply by eliminating the grid-cathode capacitors, grounding the cathode, and feeding the VFO output to the grid of the 6V6.

Initial calibration was made with a BC-221 frequency meter, with the VFO and all transmitter stages operating. The 6.0 mc output was checked with the BC-221 (it goes only as high as 18.0 mc) and the various points marked on the dial, as shown in the photograph. You'll note from the photo that the VFO goes

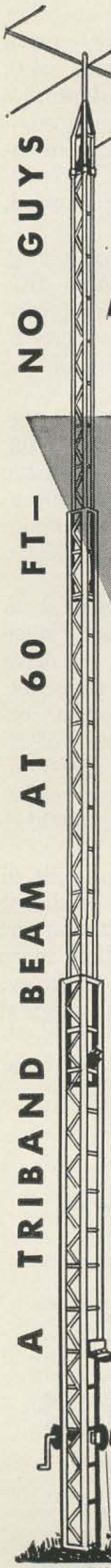

DESIGN
STRENGTH
DEPENDABILITY

THREE REASONS WHY YOUR BEST BUY IS...

E-Z WAY Satellite "60"

E-Z WAY AERO-DYNAMIC design decreases wind load and provides telescoping action that permits raising and lowering of tower sections. CRANK UP TO 60 FEET, DOWN TO 25 FEET and TILTS OVER FOR ACCESS TO ROTOR OR BEAM.

STRENGTH is built-in to every E-Z Way Tower...Heavy wall steel tubing legs, continuous diagonal bracing of solid steel rod and electrically welded throughout....no loose bolts or nuts here. E-Z Way design and strength are your assurance of DEPENDABILITY that you can count on year after year. See your nearest distributor today or write for free literature.

The SATELLITE

Model RBX-60-3P (Painted)	$335.00
Model RBX-60-3G (Galvanized)	$410.00

MOUNTING KITS:

GPK X60-3 (Ground Post)	$125.00
BAK X (Wall Bracket)	$17.00

Freight Prepaid anywhere in (48) U. S. A.
Other Towers from $99.50 to $1995.00

P. O. BOX 5767 TAMPA 5, FLORIDA

Here is Crank-Up Tower convenience at the flick of a finger!

NEW
E-Z WAY "MOTO-WINCH"

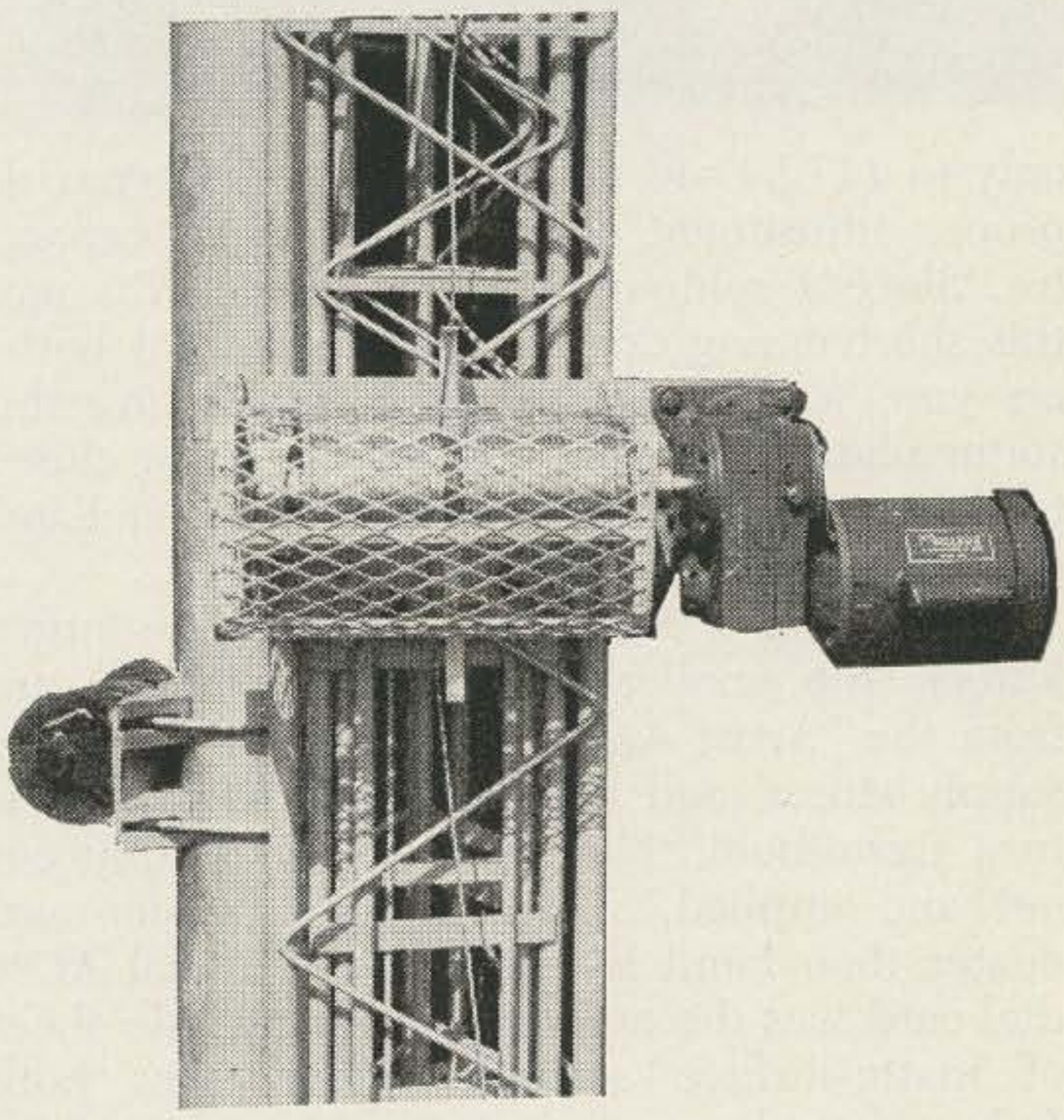

- Positive action pull-down and crank-up.
- Continuous spiral tracking groove winch drum.
- Fully weather protected motor.
- Push button control.
- Double worm gear drive.
- Designed to fit tower.
- Protective guard over winch drum.

Easily adapted to models: RBS-40-50-60, RBX-40-50-60 and 6046.

Am. Net. **$279.50**

WHEN SUPPLIED WITH TOWER.

When ordered as kit: $309.50 Am. Net.

Other "Moto-Winches" for larger towers. Write for complete details.

E-Z WAY TOWERS, Inc.

P.O. BOX 5767 TAMPA 5, FLORIDA

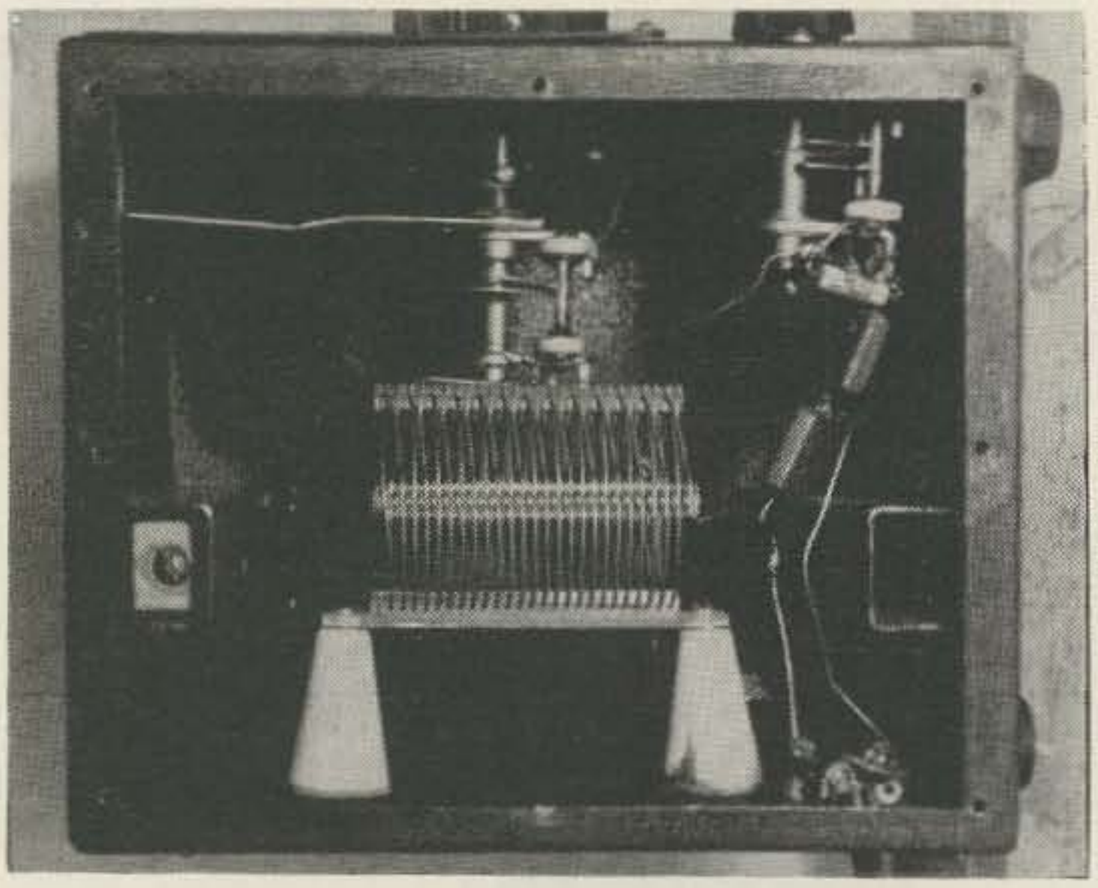

only to 147.84 mc, but it could go higher with proper adjustment of the main tuning capacitor. Since I seldom operate above 147.5 mc, this shortcoming doesn't bother me; if it bothers you, you can easily fix it by moving the stator plate of the main tuning capacitor closer to the rotor plate. The entire two meter band can, by careful adjustment, be covered.

The dial is a National ACN, and the larger letters (the smaller type is hand-lettered) are from the "Artist Aid" sheets sold by many art supply stores, and is in this case 10-point Futura Demi-bold. The numbers are simply cut out and applied, which is much easier and neater than hand lettering. The original ACN dial card was discarded in favor of a thin sheet of matte-surface acetate, which takes both India ink and pencil nicely, making it ideal for marking net frequencies and such.

It is possible to install within the transmitter a switching arrangement to allow the choice of either VFO or crystal control. Being lazy, I chose to arrange to use the VFO also as a crystal oscillator, having already converted the ARC-4 crystal oscillator into a buffer stage. A crystal adapter was built using a two-crystal phenolic socket, pins from a discarded 6V6, and a couple of capacitors. The adapter is shown in the schematic and in the foreground of the photo of the complete unit. The remote-tuning unit is simply unplugged from the oscillator chassis, and the crystal adapter inserted, with the crystal in the adapter.

The schematic of the VFO is shown in Fig. 1. You will note that twin-axial cable—RG-22/U—is used instead of two lengths of conventional coaxial cable, due to less capacity to ground from the shielded conductors of the RG-22/U.

Although it would probably be better to regulate both the plate and screen of the 5763, I have regulated only the screen, and have had no indications of frequency change due to voltage fluctuations. I use an entirely separate power supply for the VFO, which I believe helps the voltage regulation.

A 6800-ohm resistor is placed across L2, in an effort to "broadband" the coil, and, since there is more output than necessary to drive the ARC-4, it also acts as a swamping resistor. The coil (L-2) is one removed from the receiver section of the ARC-4, and consists of 25 turns of #26 enameled wire, on a 5/16 in. ceramic, slug-tuned form. If a suitable ready-made coil is not available, a Millen #69041 can be used as the coil form.

Although the oscillator circuit was built in and on a 4" by 2¾" by 2" Minibox, as shown in the photograph, we would recommend use of a 5" by 4" by 3" Minibox, to allow more room for the components, especially the relay, which was added after the design and original construction were completed.

You will note that no provisions have been

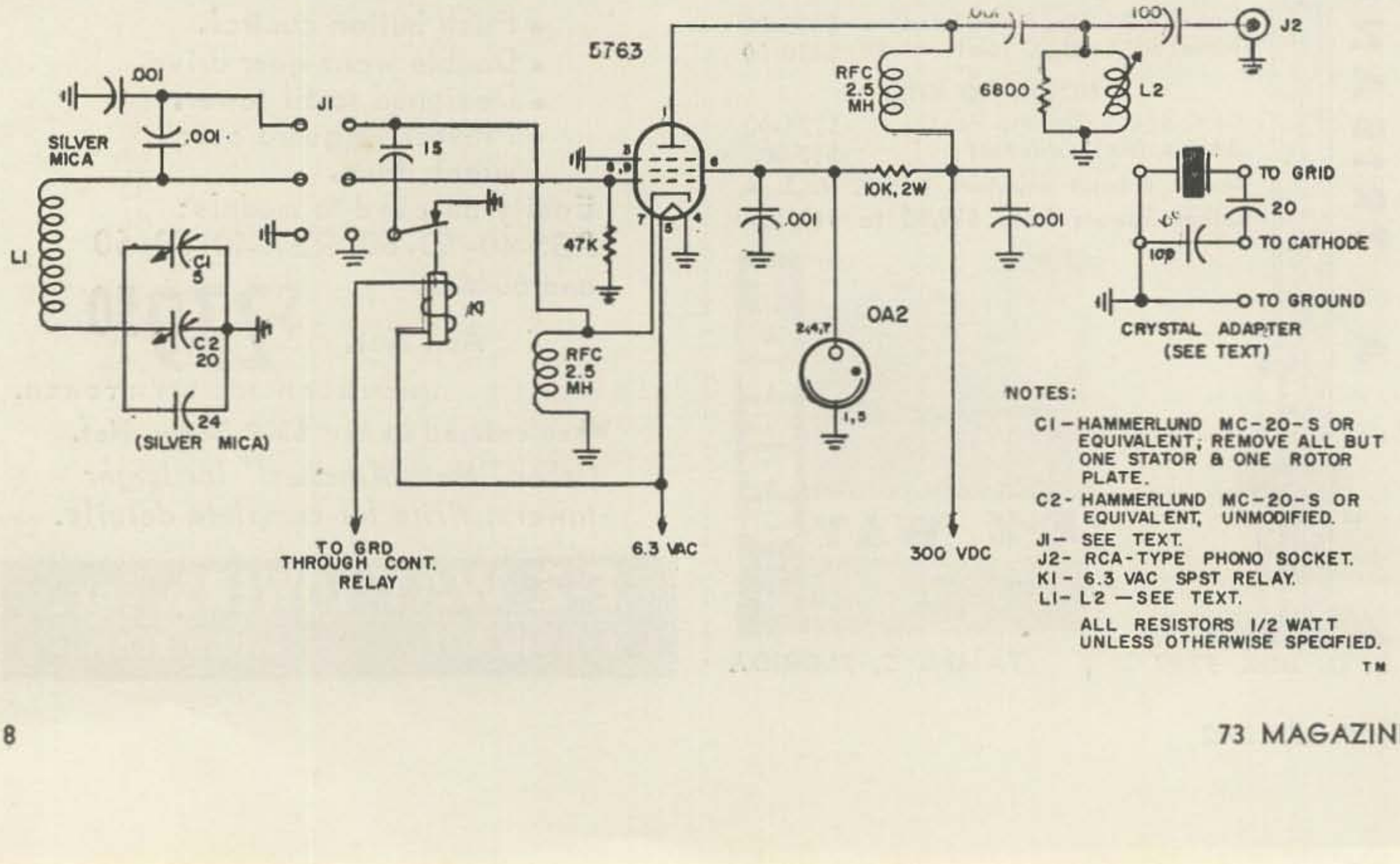

made for keying the VFO. This can be done, if you must operate CW on two meters in this manner, by placing a keying jack in the cathode of the 5763; it is not recommended, however.

The tuned circuit is built in a surplus radio equipment box, from what equipment I do not remember, and measures 10½" by 6½" by 8½". Metal utility boxes measuring 10" by 8" by 7" are readily available at low cost, if a suitable box is not at hand.

The VFO coil, L-1, is an Illumitronic Air-Dux type 1609A. The coil is manufactured with a lucite mounting strip attached. For 6.0 mc operation the entire coil is used; for 8.0 mc only 18 of the turns should be used. The coil is mounted on E. F. Johnson Co. #135-501 steatite cone insulators.

The tuned circuit twin-ax plugs into the oscillator chassis by means of a crystal socket modified for use as a plug, and a pin-type jack for the shield connection. A standard crystal socket is mounted on the oscillator chassis, as is a pin-type jack. The shield of the twin-ax is soldered to the metal plate of the crystal holder. A much neater arrangement would be the use of a three-conductor socket and plug.

The output of the VFO is fed to the transmitter through a short (the shorter the better) length of RG-59/U. I found that it was necessary to detune the output coil (L-2) slightly so that it did not over-drive the 6V6 buffer (formerly crystal oscillator) stage of the ARC-4. This, however, might not be a problem with all transmitters with which the VFO will be used.

A final word of caution: be sure to place the tuned circuit box away from *all* heat generating components and equipment, and away from all sources of vibration and shock. Observe these precautions, and the construction methods used, and we predict that you, too, will have a stable VFO for two-meter use.

. . . W6TKA

Modifying the Sixer

THAT powerful little five watter that has made six meters so very popular with everyone, can be modified very easily and cheaply for a 50% power increase, simply by changing the output tube, the 6AU8 to a 6CX8, however there is a bite to it. In addition it becomes necessary to remove and replace three resistors, one capacitor, and slightly modify the oscillator coil. It requires about thirty minutes work for the average ham, more or less.

Remove both the grid resistors from the final, that is the 10K from pin 1 to ground, and the 22K from pin 7 to ground. Also remove the 4.7 mmf between pin 3 and pin 7, this is the coupling condenser between the triode plate and the pentode grid. Also remove the 22K 2 watt resistor from the screen grid circuit (pin 8 to lug 2 on terminal strip G). Now you are ready to insert the new parts.

Connect a 47K ½ watt resistor from pin 1 to ground; and a 47K ½ watt from pin 7 to ground. Now connect a 10K 2 watt resistor from pin 8 to lug 2 on terminal strip G. Next solder in a 25 mmf ceramic from pin 3 to pin 7. Always keep all leads short as passible but giving sufficient clearance for all parts.

The final step is the most complicated of all and care must be exercised. Either remove two turns from the oscillator coil (L201); or short out one turn at each end of this coil by carefully scraping the insulation from the wire one turn down on the coil from each end for a space of about 1/16 inch, just enough to get a good tin on the wire. Be very careful not to disturb any other insulation or more than is necessary. Now solder in a short wire from the solder lug on each end of the coil form to the nearest spot where you have scraped off the insulation at the end of the first turn of wire down from the lug on the coil form. This has shorted out one turn of the coil at each end. BUT *don't* do both and remove two turns and short out two. The latter method is given for those who might wish to put the set back in its original condition. All of the modification to the oscillator coil can be done without removing the coil form from the chassis.

The reason for modifying the oscillator coil is that with a 6CX8 in the final socket, it will not tune above something around 45 or 46 mc, due to the increase in capacity of the 6CX8 over that of the 6AU8; but after modification of the oscillator coil it will easily tune to 50 mc with the slug set about midway in the coil form.

As a final step, insert the 6CX8 in the final socket, and re-tune the transmitter circuits in the same method as described in the kit manual. The approximately 50% increase in power is well worth the time, effort, and small costs involved.

. . . K4ZQQ

Modifying the Lafayette HE-45

Larry Levy WA2INM

THERE ARE SO MANY good features on the HE-45 that it is hard to find anything to modify on it. The design is different from most transceivers in this price class with the result being that the usual modifications that I would make on a transceiver are unnecessary. The transmitter uses 8 mc crystals and the 2E26 final has more than ample power. The receiver is a single conversion superhet having one rf and two *if* stages. The sensitivity and selectivity are almost communications quality (the sensitivity is better than 1 microvolt and the selectivity is 3 kc at 6 db). It has an S meter, which also measures the plate current of the final amplifier. It has full PTT, a selector switch that allows you to choose any of five crystals or a vfo, and a spot switch. The 12 volt mobile supply is built inside the case, making it a complete station for use at home or in the car.

There are a couple of minor improvements which will make operation easier. The first of these is the addition of a non-spring return transmit switch. The spring return transmit switch seems to be a holdover from the original CB model of this transceiver, and on the citizens band, transmission should be as short as possible and it is unnecessary to have a fixed switch. This sometimes does make a long transmission on the ham bands somewhat uncomfortable because of the rather healthy spring used to spring-load the PTT switch on the microphone. This situation is easily corrected by mounting a SPST toggle switch somewhere on the panel and connecting it to pins 1 and 2 on the microphone jack. This will make the rig easier to operate and you will still be able to use the momentary PTT if you should so desire.

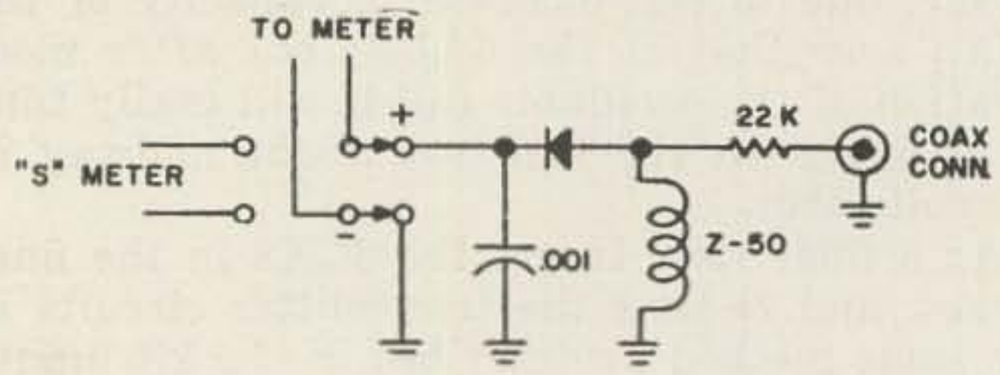

FIG 1

It is sometimes necessary to close-talk the microphone to get a high modulation percentage, especially if you normally speak quietly. This situation can be corrected by making the following changes: 1. Replace the 56K resistor in the plate circuit of V4-B with a 330K resistor. 2. Break the lead between the cathode of V4B and ground and add a 500 ohm resistor in parallel with a .25 mfd between the cathode and ground. 3. Replace the 5.6K screen resistor of the 2E26 with a 27k 2 watt resistor. These changes will considerably improve the modulation as well as eliminating a slight amount of instability in the final.

The dip on the final plate current is so slight that it is hard to tell when maximum output is reached when loading up some antennas. It is easy to change the metering circuit to one that measures rf output. To do this, first remove the white and the unshielded blue leads from the .51 ohm shunt resistor. The white lead is grounded. The blue lead is connected to the detector circuit shown in Fig. 1. The transmitter is then tuned for maximum deflection of the meter. A few of the HE-45 receivers have a tendency to drift during the first few minutes of operation. To correct this, replace the condensers that are connected to the oscillator coil as well as the one used for coupling to the mixer with new NPO condensers of the same value.

While these modifications were written for the HE-45, they can also be used on the 10 meter version (HE-50) or the CB unit as well.

. . . WA2INM

TM

SSB ON 2 OR 6 ?

Telco "SB" Line

DEPENDABLE • RELIABLE

Telcos New "SB" Series in Action

ALL "SB" SERIES ARE HOUSED IN SAME CABINET

HEAR YE.....

SYSTEM DESIGNED . . . FOR YOUR SYSTEM

All those interested in SSB

TELCO ANNOUNCES THE Following . . .

SB 50 — 6 meter heterodyne converter allows your 20 meter transmitter to operate on 6. Only 5 watts 14mc drive needed. Input is 90w AM or CW, and 125w P.E.P. SSB on 50mcs. Input & output 50 ohms. **$85.00**

SB 50 C — A must for S-LINE owners. Puts your S-line on 6 meters with nothing else to buy. Complete Plug-In operation. Makes use of converter output and power supply of S-line. Delivers 175w P.E.P. on 6 meters, using 2-6146's. Built in with 201 converter for optimum reception, and allows use of transceive feature. Complete with all interconnecting cables. **$239.00**

SB 2-C — A must for S-LINE owners. Same as SB-50-C, but for 2-meters. **$289.00**

SB-80 M1 — Same as the SB-40-M1, but converts the KWM-1 to 80 meters. **$175.00**

SB-80 40-M1 — For the KWM-1. Allows 80 and 40 Bandswitch Operation (next month).

SB TWO — Similar to the SB-50 XMTG Converter, but for 2 meters. **$139.50**

MODEL SIX — Complete 6 meter single sideband (USB & LSB), AM, and CW transmitter. 175 watts P.E.P. (2-6146 finals) filter sideband generation, complete with built-in VXO, wait till you see the low price (next month).

SB 40 M1 — Converts your KWM-1 to 40 meter transceive operation. Obtains power from the KWM-1 power supply and provides a clean 175 P.E.P. punch. Outstanding TELco 40 Meter Converter assures excellent reception on 40. Completely ready to go mobile or fixed, with all cables. **$175.00**

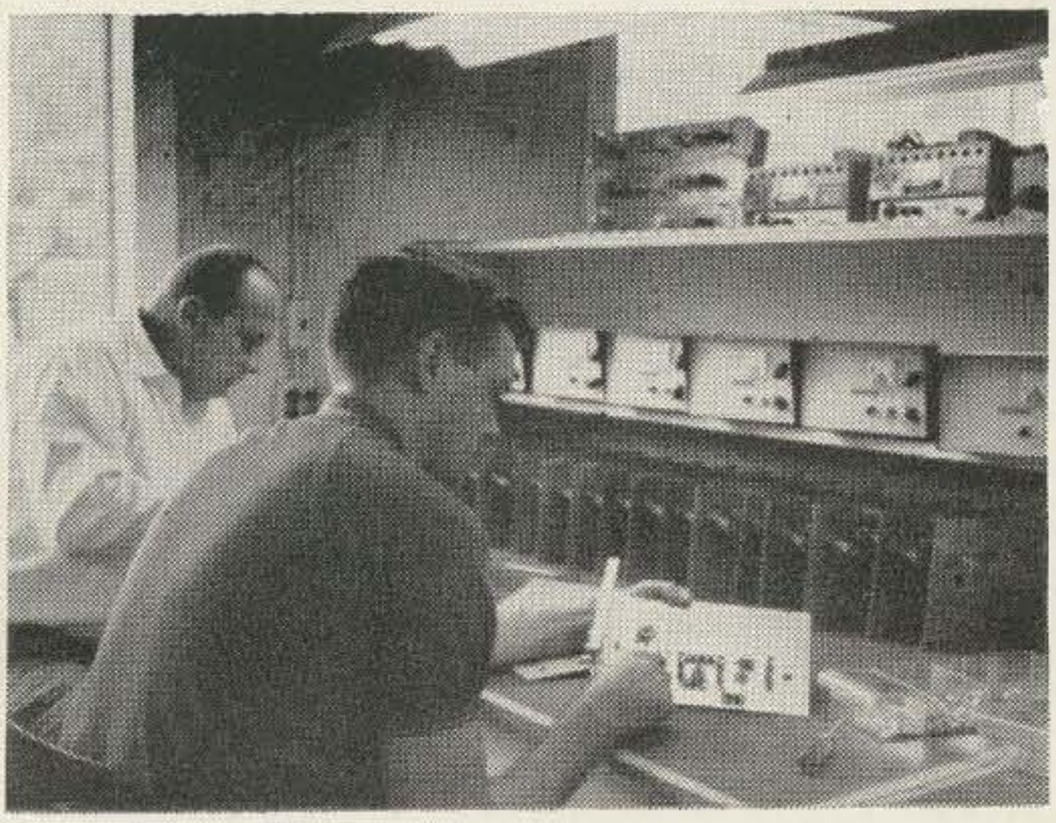

ALL MODELS ARE AVAILABLE NOW

SEE THE SB SERIES AT YOUR DISTRIBUTOR, OR ORDER DIRECT

Ask about the Time Payment Plan.

Write to:

Howie Ryder—WI-WGH
Amateur Sales Manager

TELCO

TAPETONE ELECTRONICS LABORATORIES INC.

99 Elm St., West Newton 65, Mass.

Tel. (617) 332-1123

73 Tests the

Irving Hiverter 50

Sideband is a real comer on six meters and you seldom lack for a contact on SSB these days. As more and more converting transmitters and complete sideband rigs become available commercially it is obvious that sideband will become as popular on six meters as it has on the lower frequencies for it gives the same benefits. You can work out over much greater distances per given watt of input . . . it is simpler to build high power output stages when you don't have to worry about getting all that plate modulation power together . . . there is much less QRM, which has become quite a problem on six lately . . . and you can work through aurora with it.

A new piece of gear on the VHF market today is the Irving Electronics Hiverter 50. The Hiverter will convert any twenty meter AM, CW or SSB exciter into an efficient six meter transmitter with no trouble at all. A small company has to be especially careful of the quality of their product, or pfft goes its entire income. "Pappy" Irving has been scruplously careful with his products, and believe me . . . it shows on the Hiverter 50.

The unit can be used with any transmitter that is capable of producing from 10 to 100 watts of 14 mc rf. About six watts are needed to drive the unit, so transmitters with more than a twenty watt maximum must have some sort of carrier insertion control or attenuating device between their output and the Hiverter input. The instruction manual has a number of diagrams for simple resistive pads in case the user finds he has no way to control his driving transmitter output. With twenty watts input, the Hiverter will deliver 20 watts on AM, 35 watts on CW and 30 watts pep on SSB.

There are no unusual circuits involved in the Hiverter; a 6CL6 functions as a grid-plate harmonic oscillator, and uses an 18 mc crystal that doubles in its output section. So, if the twenty meter exciter is operating at 14.2 mc, the six meter output from the Hiverter will be 14.2 plus 36 which equals 50.2 mc.

The output of the harmonic oscillator is capacity coupled to the cathode of the 5763 mixer. The output of the mixer is tuned to the sum frequency of the Hiverter oscillator and the 20 meter exciter to produce output in the 50 mc range.

The amplifier circuit uses a 6146 that operates class AB1 or AB2. An rf choke and a capacitor form a series resonant circuit at 14 mc to eliminate the chances of having a 14 mc signal appear at the output of the Hiverter. The amplifier output tunes through a pi network, so any antenna with 50 to 100 ohm impedance should work out just dandy.

The internal wiring is all done on printed circuits, and everything is easily accessible for maintenance. The only maintenance that the user will be running into will be the periodic tube checks that are recommended in the manual.

An external power supply is needed to power the Hiverter, and most modern transmitters should be able to provide the voltages required. Four voltages are needed: 6.3 vac. 600 vdc, 300 vdc, and −130 vdc for bias. If the driving transmitter can't supply these voltages, a supply such as the Heath HP20 can be used or a supply can easily be built.

Tuning up is pretty simple with only three controls: mixer, amplifier, and antenna. Of course the driving transmitter must be pretuned on twenty meters before its output is fed into the Hiverter.

We drove the Hiverter on all three modes with a 200-V that was adjusted to produce 20 watts of rf on 14 mc. We got the maximum output claimed for the unit with no trouble at all. On SSB, the output, measured with a Gavin bridge was thirty watts on voice peaks. We also got the full 35 watts on CW, and 20 watts on AM. In the course of testing the unit many stations were worked on all three modes on six meters. All the reports we got ranged from five by sixes to five by nines. Modulation reports were excellent. We experienced no trouble at all even when we overloaded the Hiverter input for short periods.

The Hiverter 50 is a heckuva lot of fun to use, and it is a simple way to get a good SSB signal on six without having to buy a mess of new equipment. The Hiverter should make quite a Christmas present . . . it's inexpensive ($99.50 complete), efficient, and fun to hook up and use. We sure enjoyed it.

73 Staff.

Here's the rig you've been waiting for — Clegg's new THOR VI Transceiver for 6 Meters. Astonishing performance . . . Priced right!

Fixed station or mobile, this little power package reflects all the advanced engineering and design features that have made CLEGG the "most wanted" gear in the VHF field.

Talk about performance . . . listen to this: **Fifty solid watts** on both AM and CW; high level modulation with full speech clipping to give you famous CLEGG "Talk Power"; true transceiver operation with tuneable oscillator in the receiver serving as the VFO in the transmitter; provision for keying the transmitter.

A low noise double conversion super-heterodyne receiver complete with BFO and ANL provides maximum selectivity and sensitivity with stability equal to the exacting requirements of SSB and CW; separate power supply/modulator for 115V AC operation. A fully transistorized power supply/modulator for 12V DC available soon.

And best of all, this rig is priced at a level that every ham can afford. Place your order with your distributor today. Deliveries start late in November.

And here's one for you VHF sidebanders!

It's the new CLEGG VENUS six meter transceiver for SSB, AM or CW! Once you've used or heard this rig you'll appreciate the engineering and design "Know-how" that made it possible.

Here's what you can expect: A superbly engineered crystal lattice filter, SSB transmitter of greater than 120 watts PEP input; amazing frequency stability, VFO controlled by the receivers tuneable oscillator; full power input on CW and a substantial signal on AM phone. There is also output provision to drive a KW linear final.

In the receiver section a double conversion, low noise super-het of extreme sensitivity and selectivity, with crystal lattice filter and product detector provides flawless reception of sideband, AM phone or CW. A 115V AC power supply of adequate capacity is a separately mounted unit which can be installed at any convenient distance from the transmitter.

This rig, too, is priced within reach of every ham. Watch for it at your distributors late in January. Place your order now to be sure of early delivery.

And here's a winner and STILL champion in it's class! The famous Clegg 99'er, six meter transceiver favorite of thousands of VHF hams is small in size, low in price and tops in performance.

The 99'er offers operating features unequalled in far more costly gear. The double conversion super-het receiver provides extreme selectivity, sensitivity and freedom from images and cross modulation. The transmitter section employs an ultra-stable crystal oscillator which may also be controlled by an external VFO. An efficient high level modulated 8 watt final works into a flexible PI network tank circuit. A large S meter also serves for transmitter tune-up procedure.

Clegg LABORATORIES

504 ROUTE 53, MT. TABOR, NEW JERSEY

OAkwood 7-6800

Been "reading the mail" lately?

Good news travels fast. And if you've been listening to local or DX bands you know that Gonset has come out with a new single side band transceiver that's everything you've been waiting for!

Of course you want the facts on the new Gonset GC-102, so here's the scoop. Whether you want to operate it barefoot or with shoes, the GC-102 is the best SSB transceiver you can buy!

Because the Gonset GC-102 receiver uses transistors and "hybrid" tubes, it operates from 12 volt DC with a minimum power drain!

Coupled with the Gonset GSB-201 Linear Amplifier, the GC-102 gives 1500 watts P.E.P. input.

ONLY THE GONSET GC-102 SSB TRANSCEIVER GIVES YOU ALL THESE DELUXE FEATURES!

- Mechanical filter used to generate side band.
- All bands, 80 through 10 meters, in basic 500 KC segments.
- 2-speed concentric dial drive with "coarse" tuning ratio of 20:1 (50 KC/revolution) and "vernier" tuning ratio of 100:1 (10 KC/revolution).
- Power input to final: 180 watts P.E.P.
- Receiver features dual conversion.
- Semi-digital dial presentation with 10 KC major divisions, 2 KC minor divisions.
- Highly stabilized VFO.
- Designed for mobile and fixed station operation.
- Separate AC and 12 volt DC power supplies.
- AC P/S forms pedestal for transmitter to match appearance of GSB-201 Linear Amplifier.
- "Edge-lighted" dial and illuminated "S" meter.
- 100 KC Crystal calibrator built in.
- Transceiver tunes WWV (15 Mcs) for calibration purposes.
- High voltage power supply is used only in "transmit" mode.
- VOX and speech amplifier sections are completely transistorized.

For the Gonset distributor in your community consult list on the next page.

GONSET®
DIVISION OF YOUNG SPRING & WIRE CORPORATION
801 SOUTH MAIN STREET, BURBANK, CALIFORNIA

FOR FULL INFORMATION AND DEMONSTRATION OF GONSET QUALITY COMMUNICATIONS EQUIPMENT WRITE OR VISIT ANY OF THE FOLLOWING DISTRIBUTORS

EASTERN STATES

ALABAMA
BIRMINGHAM
James W. Clary Company
1713 2nd Ave., South

CONNECTICUT
HARTFORD
Dressler Electronics
325 Trumbull Street
Hatry of Hartford, Inc.
100 High Street
NEW BRITAIN
Universal Radio
63 East Main Street
NEW HAVEN
Radio Shack
230 Crown Street
NEW LONDON
Aikens Electronics Sup., Inc.
531 Broad Street
DeMambro Radio
334 Broad Street
STAMFORD
Radio Shack
High Ridge Rd.
WATERBURY
Bond Radio
439 West Main Street
WEST HAVEN
Aikens Electronics Supply
670 Orange Street
WEST HARTFORD
Radio Shack
39 South Main Street
WESTPORT
Music Systems of Westport
Post Road

DISTRICT OF COLUMBIA
WASHINGTON
Electronic Wholesalers, Inc.
2345 Sherman Avenue, N.W.

FLORIDA
MIAMI
Electronic Wholesalers, Inc.
9390 N.W. 27th Avenue
ORLANDO
Amateur Electronic Supply
23 Azalea Park Shop. Ctr.
TAMPA
Kinkade Radio Supply, Inc.
1719 Grand Central Avenue

MAINE
AUBURN
Radio Supply Co.
28 Cross Street
BANGOR
Radio Service Lab.
23 Palm Street
PORTLAND
Radio Service Lab
1004 Congress Street

MARYLAND
BALTIMORE
Amateur Radio Center
2203 N. Fulton Avenue
SALISBURY
Standard Electronics Co., Inc.
301 Snow Hill Road
TOWSON
Baynesville Electronics
1631 E. Joppa Road
WHEATON
Electronic Distributors, Inc.
11324 Fern Avenue

MASSACHUSETTS
BOSTON
Cramer Electronics
811 Boylston Street
DeMambro Radio Supply Co.
1095 Commonwealth Avenue
Lafayette Radio
110 Federal Street
Radio Shack
730 Commonwealth Avenue
BRAINTREE
Radio Shack
Shopping Center
BROCKTON
DeMambro Radio
1839 Main Street
BUZZARDS BAY
Buzzards Bay Electronics
196 Main Street
FALL RIVER
Haddad Electronics
121 Pine Street
HAVERHILL
Valley Electronics
201 Winter Street
HYANNIS
DeMambro Radio
223 Barnstable Road
LAWRENCE
Alco Electronics
3 Wolcott Street
DeMambro Radio
194 Broadway
LEOMINSTER
DeMambro Radio
760 South Main Street
NEW BEDFORD
E. A. Ross Co.
1663 Purchase Street
MEDFORD
DeMambro Radio
135 Mystic Avenue
N. WESTPORT
DeMambro Radio
95 GAR Hwy., State Road
READING
Graham Radio
505 Main Street
SALEM
DeMambro Radio
280 Highland Avenue
SAUGUS
Radio Shack
Shopping Plaza
SPRINGFIELD
DeMambro Radio
269 Spring Street
WORCESTER
Radio Maintenance
80 Thomas St.
DeMambro Radio
222 Summer Street

NEW HAMPSHIRE
CONCORD
Evans Radio, Inc.
P. O. Box 312
DOVER
DeMambro Radio
3 Hale Street
KEENE
DeMambro Radio
300 West Street
MANCHESTER
DeMambro Radio
1308 Elm Street
PORTSMOUTH
Rockingham Electric
377 Court Street

NEW JERSEY
CAMDEN
Radio Electric Service Co.
513 Cooper Street
MOUNTAINSIDE
Federated Purchases, Inc.
1021 U. S. Rte. 22
PARAMUS
Lafayette Radio
182 Route 17
PATERSON
National Electronics
226–17th Avenue
UNION CITY
Nidisco, Inc.
2812 Hudson Boulevard

NEW YORK
ALBANY
Fort Orange Radio Dist. Co.
904-916 Broadway
AMSTERDAM
Adirondack Radio
185 West Main Street
BUFFALO
Genesee Radio & Parts Co.
2550 Delaware Avenue
CORTLAND
Winchell Electronics
65-67 Clinton Avenue
ELMIRA
Chemung Electronics, Inc.
403 E. Third Street
FREDONIA
Barker Higbee, Inc.
27 Water Street
JAMAICA
Harrison Radio
144-24 Hillside Avenue
Lafayette Radio
165-08 Liberty Avenue
MINEOLA, L.I.
Arrow Electronics
525 Jericho Turnpike
NEW YORK
Arrow Electronics
65 Cortlandt Street
Harrison Radio
225 Greenwich Street
Harvey Radio Co., Inc.
103 West 43rd Street
Terminal Hudson Radio
236 West 17th Street
ROCHESTER
Rochester Radio Supply Co.
600 East Main Street

NORTH CAROLINA
ASHEVILLE
Freck Radio & Supply Co., Inc.
38 Biltmore Avenue
CHARLOTTE
Dixie Radio Supply Company
1900 Barnwall Street
RALEIGH
Southeastern Radio Sup. Co.
414 Hillsboro Street

OHIO
ASHTABULA
Morrison's Radio Supply
331 Center Street
CINCINNATI
The Mytronic Co.
2145 Florence Avenue
Steinberg's, Inc.
633 Walnut Street
CLEVELAND
Bernon-Ray Service, Inc.
2118 East 21st Street
Broadway Electric Supply Co.
6209 Broadway, S.E.
Pioneer Electronic Sup. Co.
5403 Prospect Avenue
Radio & Electronic Parts Corp.
3235 Prospect Avenue
COLUMBUS
Universal Service
114 North Third Street
DAYTON
Custom Electronics, Inc.
1918 South Brown Street
Srepco, Inc.
314 Leo Street
DOVER
Southeastern Electronics Specialists Co.
203 N. Tuscarawas Avenue
FREMONT
Swartzlander Radio, Ltd.
1524 Oak Harbor Road
LORAIN
Pioneer Electronic Supply Co.
1648 Broadway
MARION
Bell Radio Supply
527 N. Main Street
STEUBENVILLE
D & R Radio Supply
215 South Third Street
P. O. Box 670
TOLEDO
Selectronic Supplies, Inc.
3185 Bellevue Road
Warren Radio Co.
1002 Adams Street

PENNSYLVANIA
ALLENTOWN
A. A. Peters, Inc.
231 N. 7th Street
ALTOONA
Altoona TV Supply, Inc.
1720 Union Avenue
ELKINS PARK
A. G. Radio Parts Co.
939 Township Line
PHILADELPHIA
Almo Radio Company
913 Arch Street
PITTSBURGH
Tydings Company
933 Liberty Avenue
POTTSVILLE
Moyer Electronics Supply Co.
330 East Norwegian Street
READING
George D. Barbey Co., Inc.
333 North 4th Street
WYNCOTE
Howard C. Buerger Co., Inc.
Rices Mill Rd. & Glenside Ave.

RHODE ISLAND
CRANSTON
Radio Shack
1301 Reservoir Avenue
PROVIDENCE
DeMambro Radio
1292 Westminster Street
W. H. Edwards Co.
116 Hartford Avenue

TENNESSEE
NASHVILLE
Electra Distributing Company
1914 West End Avenue

VERMONT
BURLINGTON
Radio Service Lab.
703 Pine Street
ST. JOHNSBURY
DeMambro Radio
52 Portland Street

VIRGINIA
ARLINGTON
Key Electronics Division
Industry Services, Inc.
100 South Wayne Street
NORFOLK
Priest Electronics, Inc.
6431 Tidewater Drive

WEST VIRGINIA
CHARLESTON
Chemcity Electronic Dist.
1637 Fourth Avenue
HUNTINGTON
Electronic Supply, Inc.
222 Seventh Avenue

CENTRAL STATES

ARKANSAS
TEXARKANA
Lavender Radio & TV Sup. Co.
522 E. 4th Street

COLORADO
DENVER
Radio Products Sales Co.
1237–16th Street

ILLINOIS
CHICAGO
Allied Radio Corp.
100 N. Western Avenue
Amateur Electronic Supply
6450 N. Milwaukee Avenue
Green Mill Radio Supply Co.
145 West 111th Street
Newark Electronics Corp.
223 W. Madison Street
MOLINE
Lofgren Distributing Co.
1212 Fourth Avenue
PEORIA
Klaus Radio & Electric Co.
403 E. Lake Street
Selectronics Supplies, Inc.
801 S. Adams Street
ROCKFORD
H & H Electronic Supply, Inc.
506-510 Kishwaukee Street

INDIANA
CHESTERTON
Northwest Distributing Co.
P. O. Box 7
EVANSVILLE
Castrup's Radio Supplies
1014 W. Franklin Street
INDIANAPOLIS
Graham Electronic Supply, Inc.
122 S. Senate Avenue
Van Sickle Radio Supply Co.
4131 N. Keystone Avenue
MARION
Myers Radio Supply
115-117 West 22nd Street
SOUTH BEND
Colfax Company, Inc.
747 So. Michigan Street

IOWA
COUNCIL BLUFFS
World Radio Lab.
3415 West Broadway
DES MOINES
Radio Trade Supply and/or Amateur Radio Center
1224 Grand Avenue
SIOUX CITY
Two-Way Radios, Inc.
R. R. #2

KANSAS
WICHITA
Amateur Radio Equipment Co.
1203 East Douglas
SALINA
Electronics, Inc.
227 No. Santa Fe

KENTUCKY
LEXINGTON
Tel-Rad Electronics, Inc.
1401 Delaware Avenue
LOUISVILLE
Mobile Communications, Inc.
Bowman Field

LOUISIANA
NEW ORLEANS
Bell Radio Supply Co.
2625 Tulane
Crescent Electronic Supply
537 South Claiborne
SHREVEPORT
Ports Electronic Parts Co.
2423 Southern Avenue

MICHIGAN
ANN ARBOR
Purchase Radio
327 E. Hoover Street
DETROIT
M. N. Duffy & Co.
2040 Grand River W.
Radio Supply & Engr. Co.
90 Selden
Reno Radio Company
1314 Broadway
FLINT
Shand Radio Specialties Co.
2608 Leith
KALAMAZOO
Warren Radio Company
1710 S. Westnedge
MARQUETTE
Northwest Radio of Michigan
1010 W. Washington
MUSKEGON
Electronic Distributors, Inc.
1845 Peck Street

MINNESOTA
DULUTH
Northwest Radio of Duluth
123 East 1st Street
MINNEAPOLIS
Lew Bonn Company
1211 La Salle Avenue
Electronic Center
107–3rd Avenue

MISSOURI
BUTLER
Henry Radio
211 N. Main Street
JOPLIN
Norman Electronics
402 Wall Street
KANSAS CITY
Burstein-Applebee Co.
1012-14 McGee Street
ST. LOUIS
Walter Ashe Radio Co.
1125 Pine Street

NEW MEXICO
ALBUQUERQUE
Radio Equipment Co.
523 Central Avenue

NORTH DAKOTA
MINOT
John Iverson Company
216 Second Street, S.W.

OKLAHOMA
LAWTON
Reynolds Radio Supply Co.
908 "B" Avenue
OKLAHOMA CITY
General Electronic
1032 Classen
TULSA
Radio, Inc.
1000 S. Main

SOUTH DAKOTA
WATERTOWN
Burghardt Radio & Supply Co.

TEXAS
AMARILLO
R & R Electronic Supply Co.
707 Adams Street
CORPUS CHRISTI
Electronic Equip. & Engr. Co.
Box 3687
DALLAS
Amateur Electronics
2802 Ross Avenue
HOUSTON
Busacker Electronic Equip. Co.
1216 West Clay
Gilbert Company
2301 N. Main Street
Madison Electronics
1508 McKinney Street
SAN ANTONIO
Radio & Television Parts Co.
1828 W. St. Mary's Street

UTAH
SALT LAKE CITY
Manwill Supply Co.
2511 South State Street

WISCONSIN
LA CROSSE
Communications Equip. Co.
518 State Street
KENOSHA
Chester Electronic Supply Co.
2012–52nd Street
MILWAUKEE
Allied Radio of Wisconsin
5314 N. Port Washington Rd.
Amateur Electronic Supply
3832 W. Lisbon Avenue

WESTERN STATES

ALASKA
ANCHORAGE
Yukon Radio Supply, Inc.
P. O. Box 406

ARIZONA
PHOENIX
Radio Parts of Arizona
214 So. 11th Avenue
Southwest Electronic Devices
129 E. Jefferson,
P.O. Box 3751

CALIFORNIA
BURBANK
Hagerty Radio Supply
2926 W. Magnolia Blvd.
BURLINGAME
Amrad Electronics
999 Howard Avenue
EL MONTE
Kimball & Stark
709 South Tyler Avenue
INGLEWOOD
Acorn Radio & Electronics
4736 West Century Blvd.
LONG BEACH
Scott Radio Supply Co.
266 Alamitos Street
LOS ANGELES
Henry Radio
11240 W. Olympic Blvd.
Radio Product Sales Co.
1501 So. Hill Street
MANTECA
Fulton Electronics
NORTH HOLLYWOOD
Arrow Sales, Inc.
7035 Laurel Canyon Blvd.
OAKLAND
Elmar Electronics
140–11th Street
ORANGE
Robinson Electronics
922 West Chapman
PALO ALTO
Zack Electronics
654 High Street
PASADENA
Dow Radio, Inc.
1759 East Colorado
POMONA
Com-Center
2134 N. Garey Avenue
RIVERSIDE
Mission Ham Supplies
5472 Mission Blvd.
SACRAMENTO
Calamar Electronics Co.
2163-A Fulton Avenue
Selectronics
4113 Franklin Blvd.
SAN CARLOS
Fortune Electronics Corp.
930 El Camino Real
SAN DIEGO
Western Radio & T.V. Supply
1415 India Street
SAN FRANCISCO
Amrad Supply, Inc.
3425 Balboa Street
San Francisco Radio Supply
1280 Market Street
Zack Electronics
1424 Market Street
SAN JOSE
Quement Indust. Electronics
161 North San Fernando
VAN NUYS
Valley Electronic Supply
17647 Sherman Way

OREGON
ALBANY
Oregon Ham Sales
409 West 1st Avenue

WASHINGTON
EVERETT
Pringle Radio Wholesale
2101 Colby Avenue
OLYMPIA
Colson Communications
4553 Stewart Street
SEATTLE
Radio Supply Co.
6213–13th Avenue, So.

CANADA

ALBERTA
EDMONTON
Radio Supply Co., Ltd.
10184–104th Street
Sacker Electronics Co., Ltd.
10235–103rd Street

BRITISH COLUMBIA
VANCOUVER
Taylor Pearson & Carson Ltd.
1006 Richards Street

MANITOBA
WINNIPEG
Lee-Bern & Company Ltd.
341-347 William Avenue

NEW BRUNSWICK
MONCTON
Lewis-Price TV Co., Ltd.
15 Mount Royal Blvd.

NEWFOUNDLAND
ST. JOHNS
Electronic Centre, Ltd.
90 Campbell Avenue

NOVA SCOTIA
HALIFAX
Consolidated Supply Co., Ltd.
86 Hollis Street

ONTARIO
DOWNSVIEW
Alpha-Aracon Radio Co., Ltd.
555 Wilson Avenue
FORT WILLIAM
Lee-Bern & Company Ltd.
105 Simpson Street
HAMILTON
Crawford Radio
119 John Street N.
LONDON
C. M. Peterson Company, Ltd.
575 Dundas Street
NIAGARA FALLS
Niagara TV Supply Co.
1525 Main Street
NORTH BAY
Johnson Electric Supply Co.
135 McIntyre Street, East
TORONTO
Electro-Sonic Supply Co., Ltd.
543 Yonge Street

QUEBEC
MONTREAL
Electronic Tube Co., Ltd.
464 McGill Street
Payette Radio Co., Ltd.
730 St. James Street, W.

SASKATCHEWAN
SASKATOON
Radio Supply Co., Ltd.
561 Second Street

Tom Lamb K8ERV
1066 Larchwood Rd.
Mansfield, Ohio

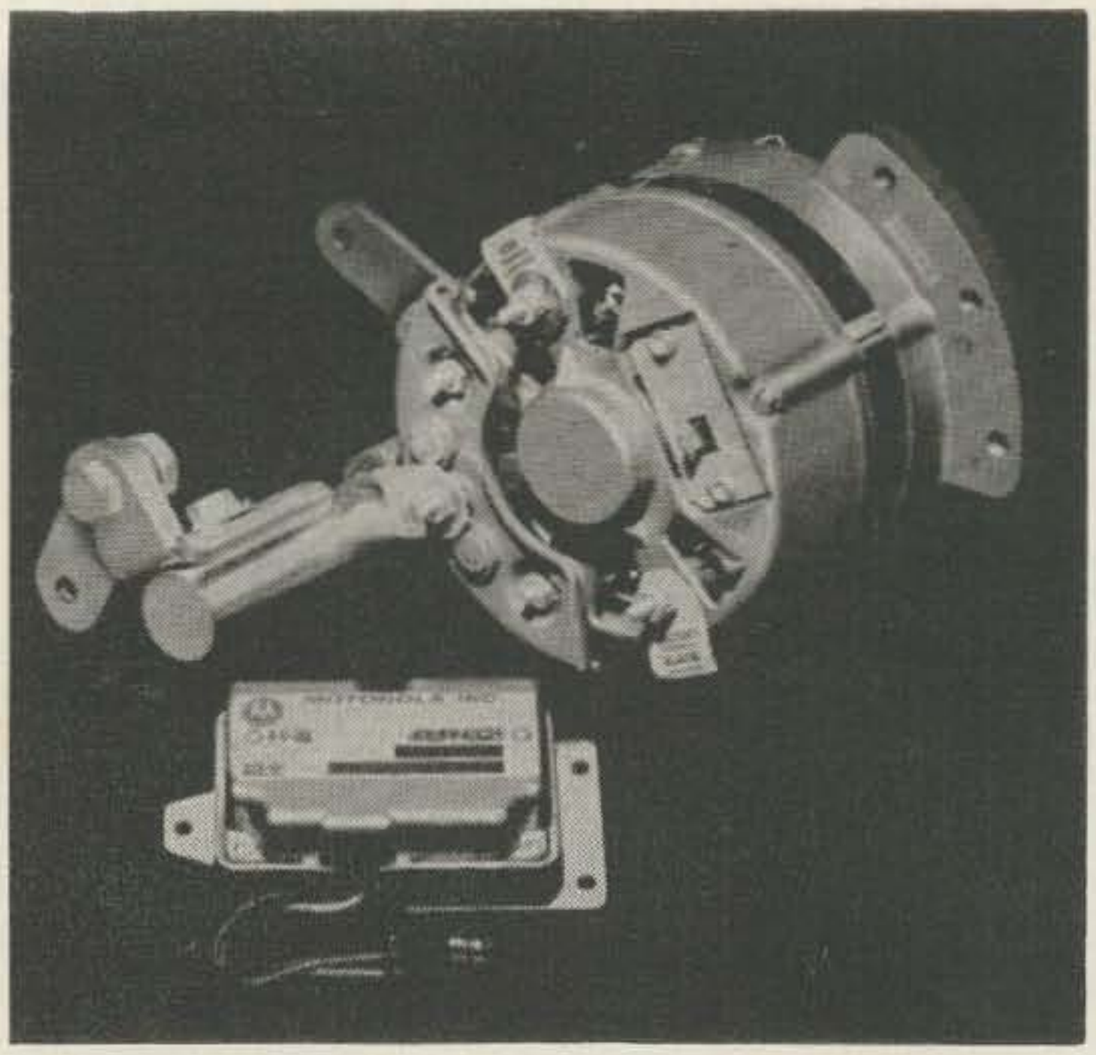

A New Look at The Alternator

THE ADVANTAGES of the alternator are not new to most mobile amateurs. Unfortunately their high cost usually limits their use to those who can obtain used machines from trucking companies, or from the police.

Motorola is now making all electronic 30 and 45 amp alternator systems that are ideal for amateur use. This new equipment is light, compact, easy to install, and costs only about one dollar per amp! The solid state regulator eliminates all regulator noise.

One of the major problems with the conventional dc generator is its complete lack of output at idle. While plenty of power may be produced at highway speeds, the average output in city driving is very marginal, and completely inadequate to support that new 100 watt mobile rig! Let's look at the reasons for this performance.

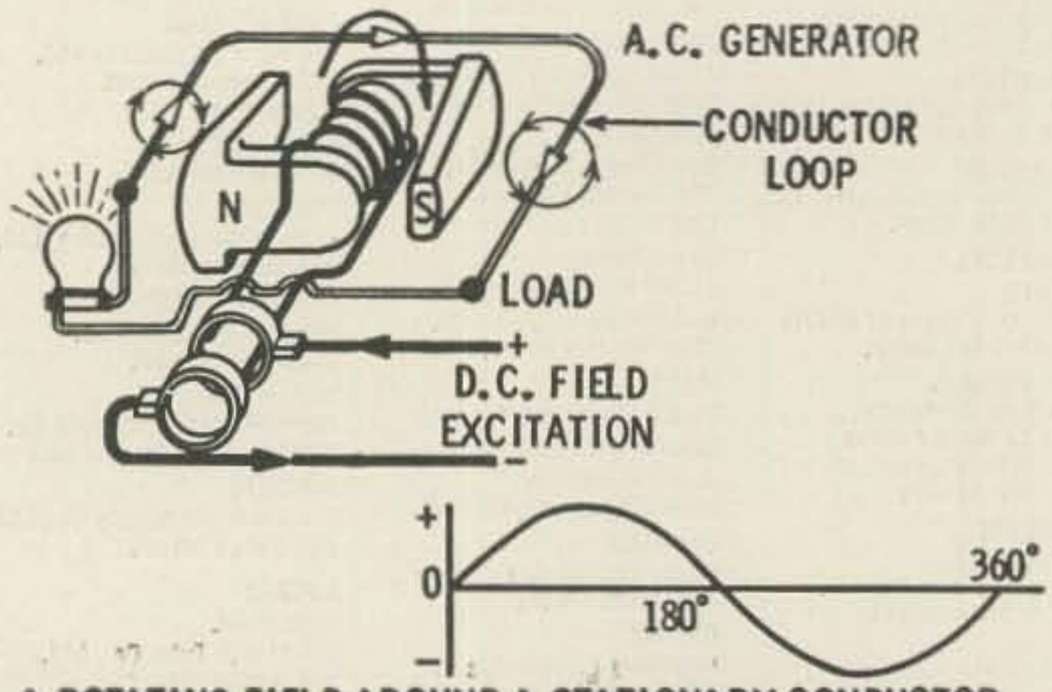

A ROTATING FIELD AROUND A STATIONARY CONDUCTOR PRODUCES AN A. C. VOLTAGE TO THE LOAD

Fig. 1

All common generators generate a no-load voltage that is directly proportional to the rotor's speed. To obtain a given voltage at a very low speed requires that the rotor have a large diameter and contain many turns of wire. But many turns of (fine) wire will not produce high output current, and a large rotor may spin the wire out of the rotor slots at high speeds. The practical speed range of a dc automotive generator is limited to about 1400-12000 rpm. The pulley ratio must of course be set for the high speed limitations, giving insufficient speed at engine idle.

Now let's see how the alternator overcomes these speed limitations. Since no internal commutator is needed in an alternator, the machine can be built "inside out." That is, the field is placed on the rotor, and the load winding (armature) is on the outer shell, or stator. Fig. 1 illustrates this rotating field construction. Notice first that a *single* light field coil is

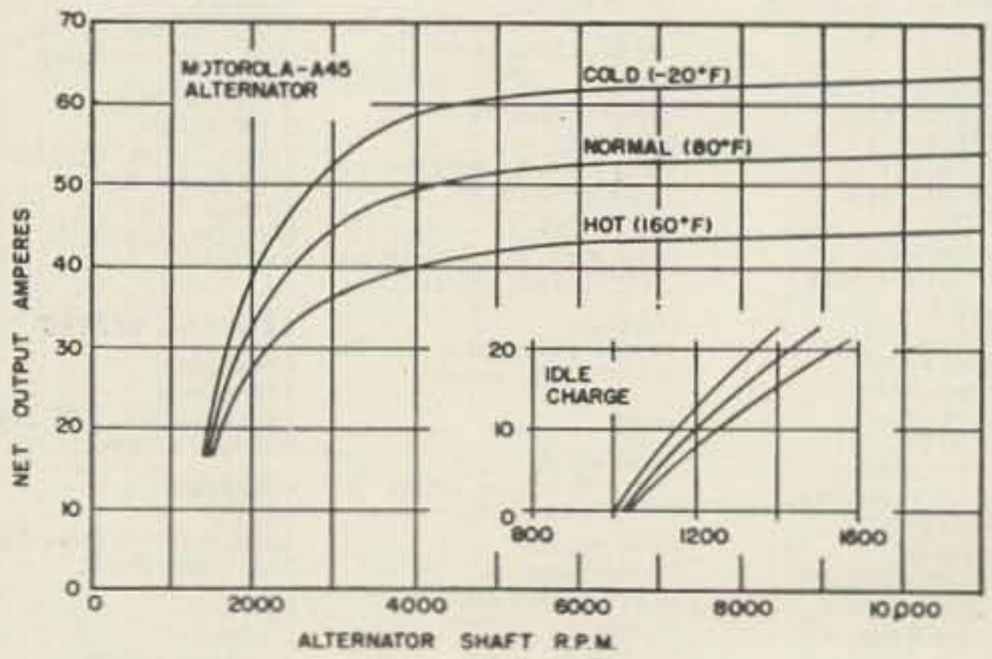

FIG. 2

wound around the shaft, not along it, and thus cannot spin off at high speeds. This single change allows the alternator to spin much faster than the generator, allowing it to produce more power at low *engine* speeds. The Motorola units will generate 5-20 amps at idle, and full power by 20 mph! (See Fig. 2.)

The rotating field construction provides other features. The rotor has only two soldered connections, compared to 28 in a generator. The three amp maximum field current can be carried by very small slip-rings and brushes, reducing the unit's size. The load current does not pass through any moving contacts. These features plus good dynamic rotor balance should give the alternator long care free life.

Regulation

Both systems use an external regulator to keep the output voltage constant and to provide system protection against overload. The generator's regulator has three relays: a cut-out relay to prevent the battery from discharging back through the generator when the motor is stopped, an over current relay to protect the generator, and a voltage sensing relay to prevent system over voltage. While this mechanical equipment works fairly well, its vibrating relay contacts cause a high-frequency hash that is discouragingly difficult to filter.

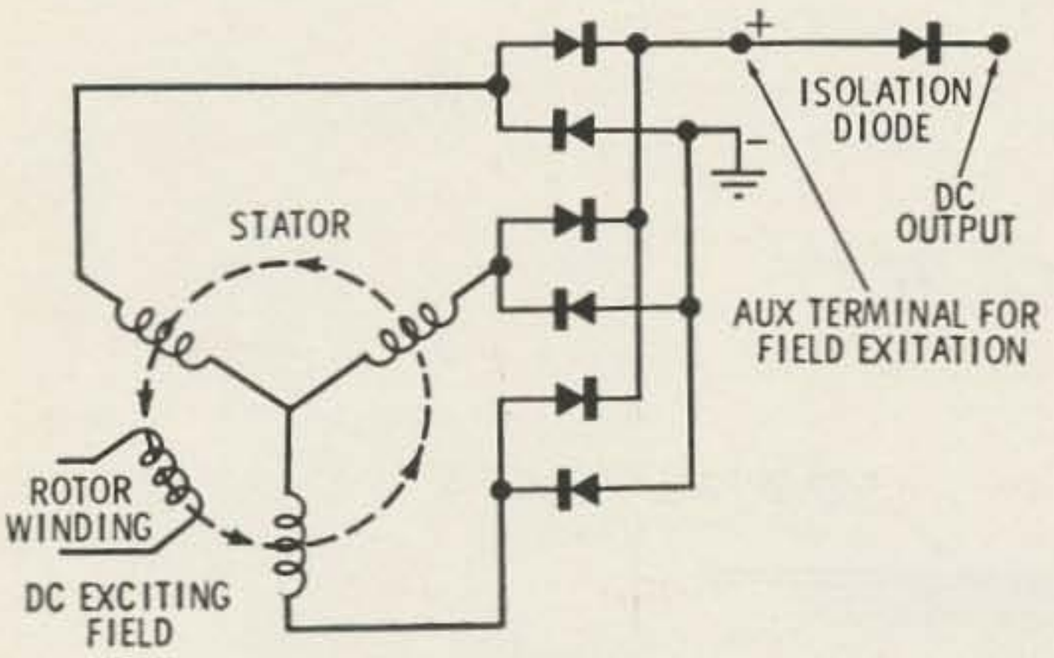

Fig. 3

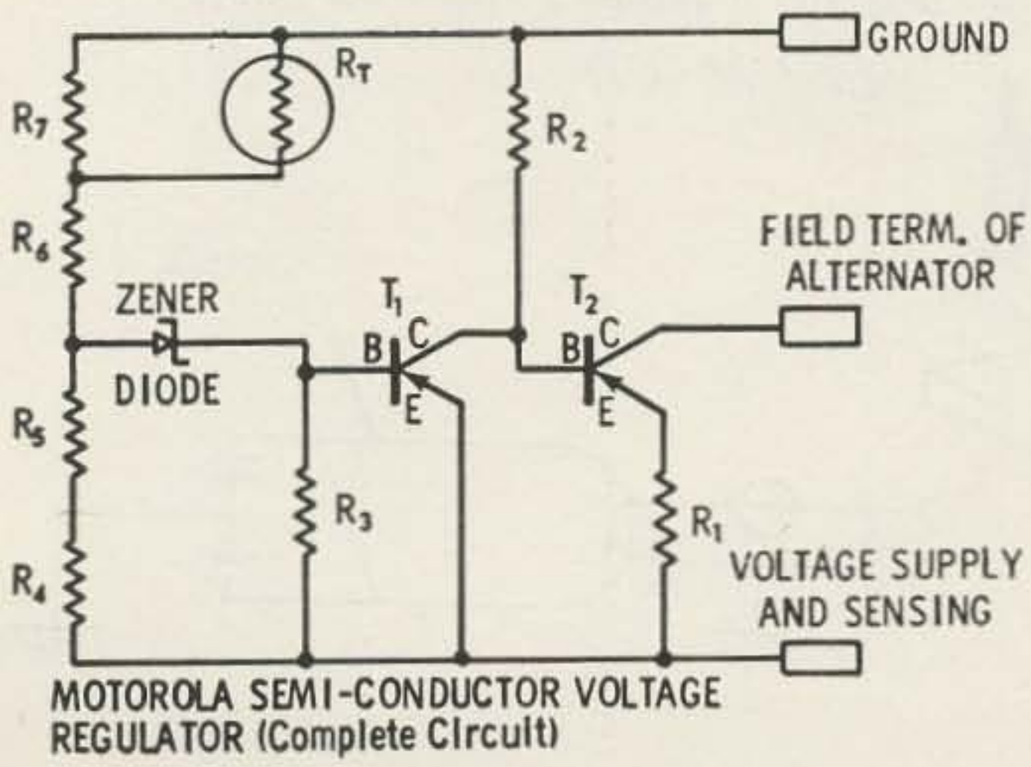

MOTOROLA SEMI-CONDUCTOR VOLTAGE REGULATOR (Complete Circuit)

Fig. 4

2 ANTENNAS IN 1

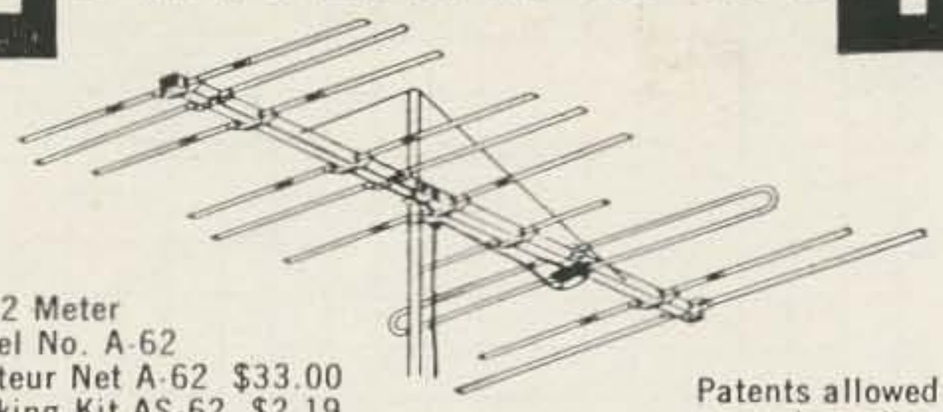

6 & 2 Meter
Model No. A-62
Amateur Net A-62 $33.00
Stacking Kit AS-62 $2.19

Patents allowed and pending

The Only Single Feed Line
6 and 2 METER COMBINATION YAGI ANTENNA
another first from **FINCO®**

ON 2 METERS
18 Elements
1 — Folded Dipole Plus Special Phasing Stub
1 — 3 Element Colinear Reflector
4 — 3 Element Colinear Directors

ON 6 METERS
Full 4 Elements
1 — Folded Dipole
1 — Reflector
2 — Directors

See your FINCO Distributor
or write for Catalog 20-226
THE FINNEY COMPANY
Dept. 20 Bedford, Ohio

CUSHCRAFT VHF BEAMS
SINGLE • DUALS • QUADS

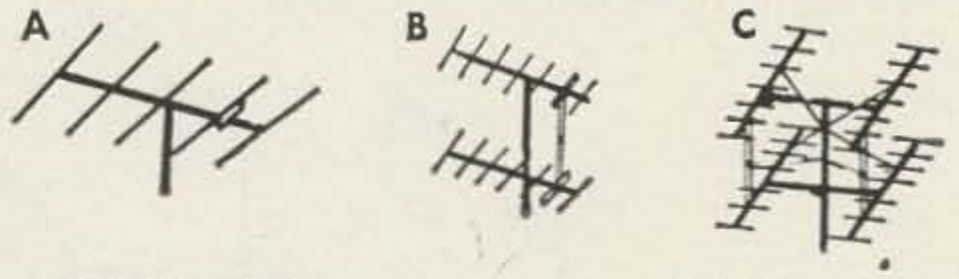

BEAMS (A)	Model No.	Ham Net
3/4 Meter 11 element	A430-11	$ 7.75
1 1/4 Meter 11 element	A220-11	9.95
2 Meter 7 element	A144-7	8.85
2 Meter 11 element	A144-11	12.75
6 Meter 3 element	A50-3	13.95
6 Meter 5 element	A50-5	19.50
6 Meter 6 element	A50-6	32.50
6 Meter 10 element	A50-10	49.50
DUAL STACKS (B)		
3/4 Meter 22 element	A430-11 D	18.50
1 1/4 Meter 22 element	A220-11 D	22.90
2 Meter 14 element	A144-7 D	21.25
2 Meter 22 element	A144-11 D	29.00
QUADS (C)		
3/4 Meter 44 element	A430-11 Q	43.00
1 1/4 Meter 44 element	A220-11 Q	54.50
2 Meter 28 element	A144-7 Q	62.50
2 Meter 44 element	A144-11 Q	76.00

See your distributor or write for complete Catalog No. 116

Cush Craft Manchester N.H. 621 Hayward Street
A FULL LINE OF • AMATEUR COMMUNICATION ANTENNAS

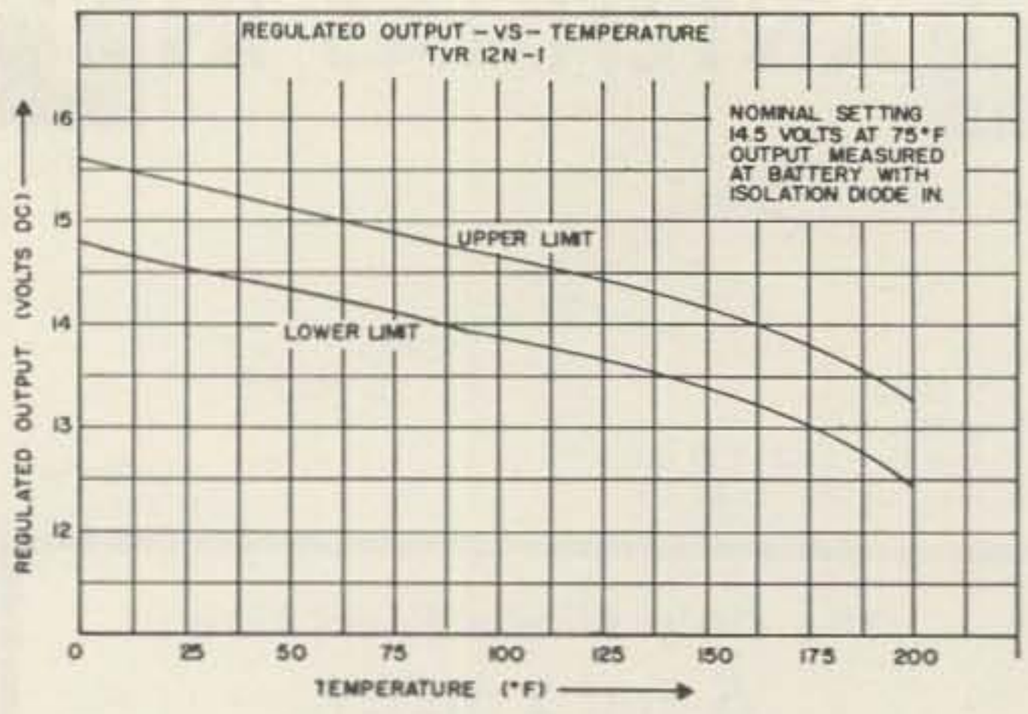

FIG 5

The Motorola system uses a solid-state regulator—no contacts, no hash! No reverse current cut-out relay is needed, the rectifying and isolation diodes takes its place (Fig. 3). Nor is an over-current relay used. Fig. 2 shows the alternator to be self limiting at high speeds. This is due mainly to an effect called "armature reaction." As the output current increases it produces a reaction field that counteracts the rotating field, leveling off the output. (The temperature effect in Fig. 2 is due to the change in coil resistance with temperature).

This leaves only the output voltage to be regulated. Fig. 4 shows the regulator circuit. When the output exceeds the present level (about 14.5 V) the 10 volt Zener diode conducts. A highly amplified current decreases the field current, restoring the proper output. The circuit is so good that the system voltage varies only .1 volt from 10 to 70 mph! A thermistor is used to match the regulator and battery characteristics over a wide temperature range, as shown in Fig. 5.

I have used this system in a Renault for six months, and consider it the most useful possible addition to a mobile installation.

I am indebted to Motorola, Inc. for the technical information contained in this article.

---

432 mc Antenna Tuner

Dear Wayne,

Took me a long time but I finally inked the drawing on the 432 mc Antenna Tuner. It works for me, showing almost unity SWR in the coax with a Jones Micromatch.

Francis LeBaron, W1TQZ

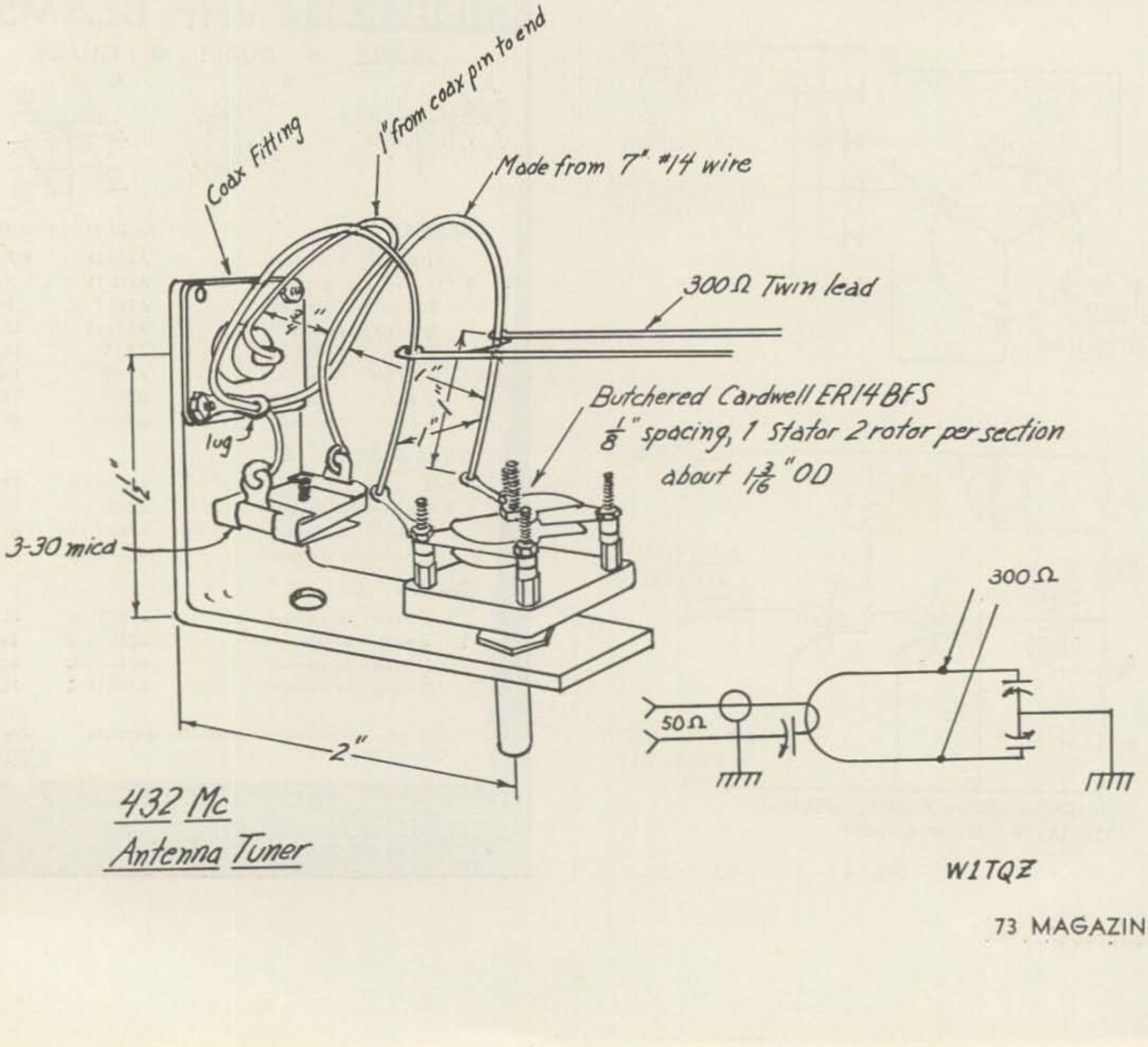

Clipper

The Chatterbox, made by C-Y Electronics, is a clever little gadget that connects between your mike and your rig and gives you a remarkably high percentage of modulation. This little transistorized clipper-filter gives you extra gain to make up for any deficiencies of your rig, increases the average percentage of modulation to give you much greater talk-power (punch), and keeps your signal within the 2.5 kc bandwidth best for communication. The gadget also works just fine with tape recorders, phone patches, and public address systems. $24.95. Write for poop-sheet and complete price list of different models. C-Y Electronics, 3810 East 365th, Willoughby, Ohio.

C-Y sent us one to try out in the HQ hamshack. The reports were very gratifying. We plugged it into every rig in the place and bothered everyone who would come back to us for a comparison. The universal result was that our signals had much greater punch with the Chatterbox in the circuit. It made quite a difference on marginal signals on two meters where fading and low signal strength often took us out of the picture without the Chatterbox. On twenty meters we just sounded a little louder than normal . . . as one chap said, "Now you sound like you are 50 db over 9 instead of 30!"

Letter

Wayne:

Why don't you pass along to the boys the fact that the spare strips in the hamshack TV can easily be modified to tune the FM band. Pull one turn off the oscillator coil for channel six and you've got it made. Just tune the slug to the proper position once. In this area we have five TV and seven FM stations, just right to fill a 12 position tuner.

Robert Tomich K7GYH

HARMONIC/TVI PROBLEMS???

6 METERS

TUNABLE LOW-PASS MAVERICK

The only low-pass filter designed expressly for 6 meters. With 9 individually shielded sections and 5 stages tunable forming a composit filter of unequaled performance. 1 DB loss. Handles 400 watts PI. 35 DB rejection. Size 5" by 2" by 3". *AMATEUR NET $16.95*

MAVERICK II WITH POWER MONITOR

Same as above but with 6 meter power indicator calibrated in watts output. Indicator Size 4" by 4" by 4½". Slant Face. Reads 0-50. 0-400 watts.

AMATEUR NET $34.95

2 METERS

BAND-PASS MODEL BP-144

A narrow band-pass filter with 6 mc pass band and 146 mc center frequency. 1 DB insertion loss. 35 DB attenuation of harmonics. Handles up to 185 watts PI. Size 4" by 2¼" by 2¼". *AMATEUR NET $11.85*

Write for complete brochures. See your local dealer.
Manufacturers of the finest UHF TV Converter

GAVIN INSTRUMENTS, INC.

DEPOT SQUARE & DIVISION STREET
SOMERVILLE, N.J.
TEL: 722–6311
AREA CODE 201

THREE IMPORTANT REASONS WHY YOU NEED THE

NEW 1962 WINTER CALLBOOK

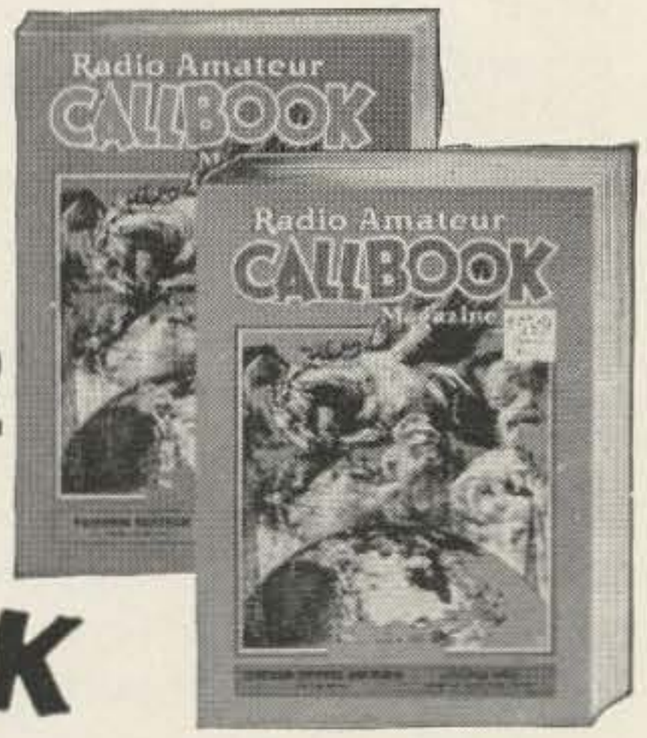

- If your present CALLBOOK is only a year old, over 20% of the listings have been changed or added!
- Over 13,000 new amateurs added since the Summer, 1962 issue—another major license increase!
- Completely revised essential data—latest international prefixes, Q signals, postal info., airline distances, time chart, etc.

Foreign Listings (All outside U.S.) **$3.00**

U.S. Listings (All K and W calls) **$5.00**

Now on sale at your amateur equipment dealer; if not conveniently located you may order by mail (please add 25¢ for mailing) from:

RADIO AMATEUR CALLBOOK, INC.
Dept. B, 4844 Fullerton Ave., Chicago 39, Ill.

P.S. Write for illustrated brochure on exclusive WORLD ATLAS . . . DX GUIDE . . . SPECIAL FULL COLOR MAPS.

Build this Auto Analyzer

for fun and profit

Carl Henry
1910 Kirby Ave.
Chattanooga 4, Tenn.

HOW MANY TIMES have you said to yourself, "if only I had a tachometer on this car"! Never? That doesn't disturb me a bit. I am still going to tell you how to build this auto analyzer. You really NEED to know. It contains among other things a tachometer, dwell angle meter, engine wall temperature indicator, and battery voltmeter.

Sounds complicated doesn't it? It is. However, think of the satisfaction of saying to your garage mechanic, "I noticed a slight knock at 1300 RPM the other day." Or, "the dwell is two degrees off" (whatever that means).

The whole project was started to replace an 'idiot light' on my Corvair, and was ended when I created this Frankenstein's monster. I get quite a bit of enjoyment from it however. Seldom do I drive into a service station without someone saying, "what's that thing?" This gives me a chance to explain the theory behind the circuit, and generally gets me faster service, since they are so happy and grateful to learn just how the circuit works.

An added attraction is that it enables you to tune up your own engine. The only additional equipment required is a shop manual for your particular type auto, and a mechanic. But on to more important things.

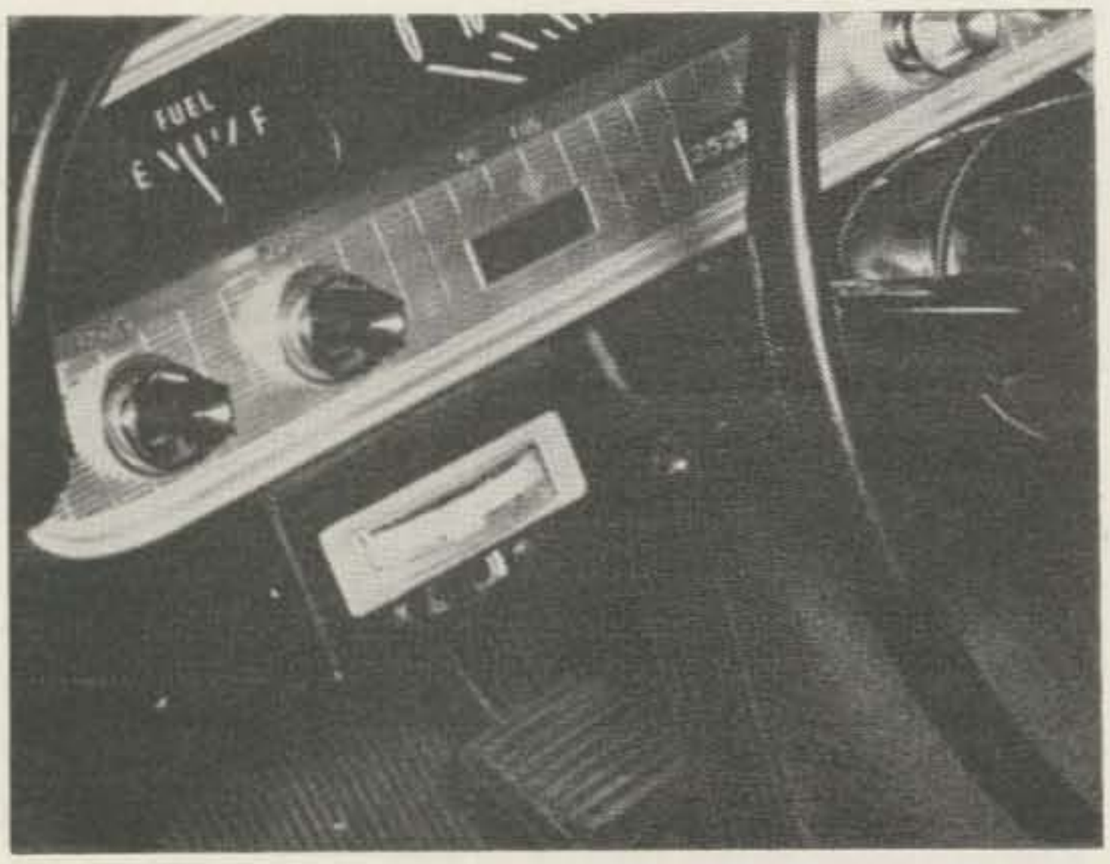

Fig. 1: Auto analyzer mounted in car.

There are four separate circuits in the auto analyzer. Any one or all four can be incorporated by the builder into his own unit. The tachometer is of course the most complicated circuit. Referring to the circuit diagram, notice that the tach input is tied to the high side of the points. This makes no noticeable difference in the operation of the engine, since the load applied by the circuit is very light. Resistor R1 and capacitor C1 form an integration network to integrate the pulses. (Along with all true southern boys, I am trying to find a segregation network to replace these integration networks and offer separate but equal facilities to all pulses, but I am unable to get a toe-hold on the problem as yet.)

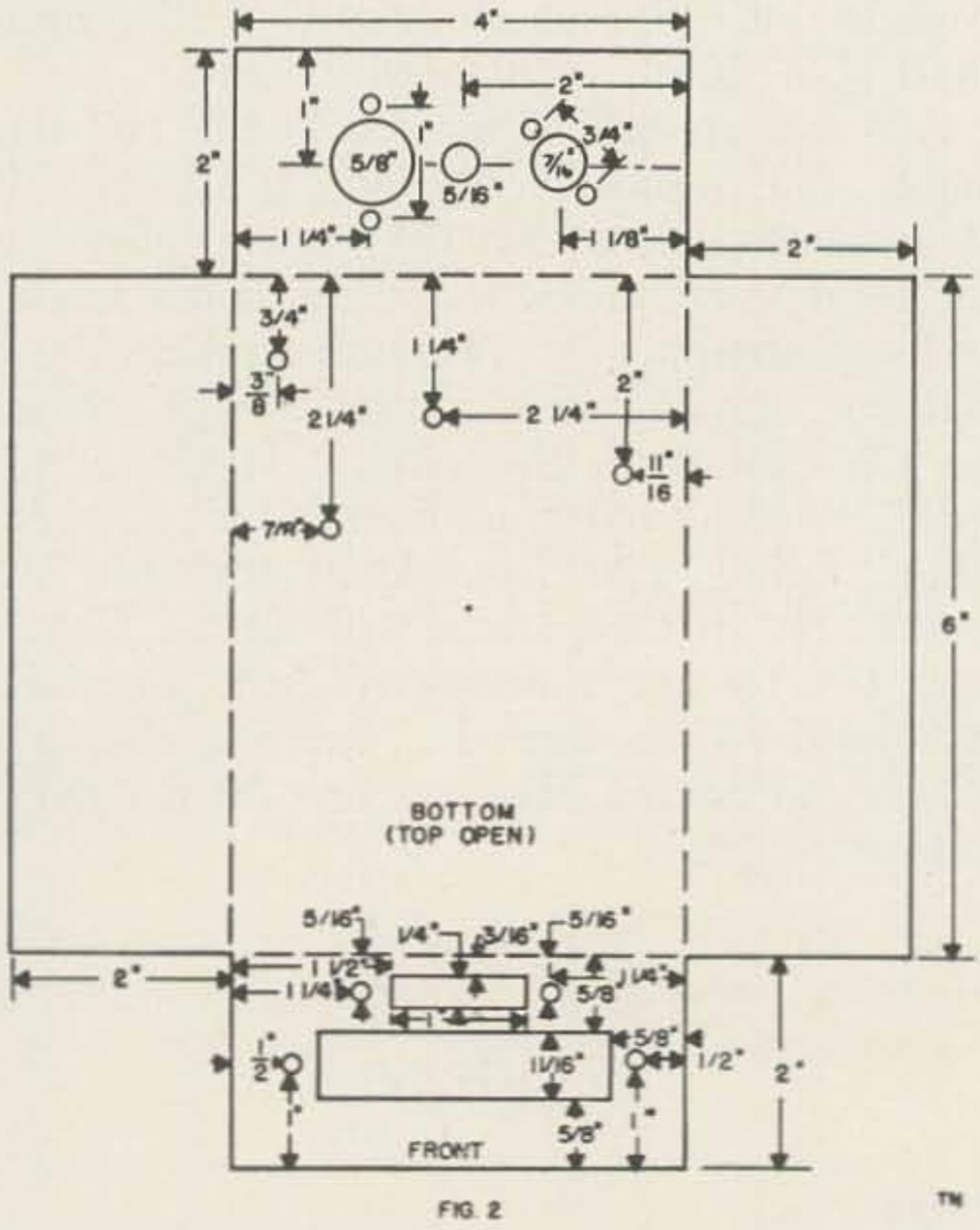

FIG. 2

To continue, capacitor C2 feeds the now integrated positive pulses to the transistor network, which is actually a pulse counter disguised as a tachometer. Observe that Q2 is normally cut off by the Q1 collector current

"THE "SIX" XMTR CONVERTER . . . .
. . . . WORKS LIKE A CHARM!"

ONLY
$99.95

In North Dakota, South Dakota, See It At The John Iverson Company, Minot, North Dakota

Continental Electronics, P. O. Box 16, Sumter, S. C.

drop across R5, and the battery BA1. Q1 is normally drawing a collector current determined by the base bias supplied by the resistor R2. When a positive pulse arrives from the ignition points, Q1 is cut off, the voltage on the base of Q2 rises, and the meter reads the collect current of Q2. Capacitor C1 and C3 tend to average the pulses and cause the meter to read steady, instead of fluctuating wildly as you would expect.

Now, at 5000 RPM, the points of a 6 cylinder auto give out with a pulse repetition rate of 5000 divided by 60 times 3 per second. Th's figures out to be 250 pulses/second. With the proper value of C1 and R6, the meter reads full scale at this repetition rate. The zener diode D1 prevents battery voltage variations from affecting the meter reading.

The other functions of the analyzer are composed of much simpler ciriuits. The battery voltage is measured by an expanded scale voltmeter. This expansion is accomplished by utilizing the fact that an ordinary silicon diode will not conduct on less than 0.6 volt. A divider is constructed with R11 and R12, such that at 10 volts input to the circuit the voltage across the diode D2 is just 0.6 volt. The meter then reads from 10 volts to 15 volts over the entire scale. This function is not as convenient as a battery ammeter, but is some help in determining whether your generator is charging the battery.

The engine temperature measurement is actually a measurement of whether the engine wall temperature is normal. A conventional ohmmeter circuit is used, consisting of R10 (a thermistor or temperature-sensing resistor), R9 (the *normal* calibration resistor) and the meter. R10 is mounted on the engine wall and R9 is adjusted to center the meter in the normal zone, after the engine is warmed up.

The point dwell is measured by an even simpler circuit. It works by virtue of the fact that the meter will indicate the average condition of the point circuit (that is, whether the points are open or closed). The meter is connected to the high side of the points by a resistor (R8) sufficient to allow the meter to read fullscale when the points are open.

When the points are closed, the meter reads zero. The meter therefore reads the average open time of the points, and is calibrated in dwell angle, 60 degrees to 0 degrees.

Construction

In order to save space, the analyzer is built to mount under the dash of an automobile. A standard chassis is used, measuring 6X4X2 inches. The open side of the chassis is used as the top, and is mounted against the under-

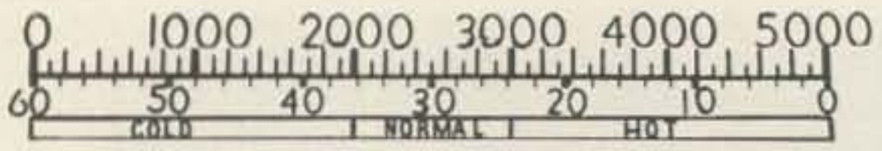

Fig. 3: Meter scale used on analyzer.

side of the dash, as shown in fig. 1. A special meter must be used to fit this type of construction. This type of meter is called an "edgewise" meter.

Begin the construction by punching the chassis as shown in Fig. 2. After punching the chassis, mount switch S1. Connect the strap and five wires, each 6 inches long to the proper lugs on the switch (see Fig. 7). The meter may now be mounted. Although a correction or read-out chart can be used with the meter, a proper scale is desirable. Fig. 3 shows the scale used on my analyzer. This will be correct for everything except an engine whose RPM will exceed 5000. A 10,000 RPM scale can be substituted in this case. Or you can make up a scale to fit your own requirements. Paste the new scale over the meter scale, using an epoxy resin cement. Other cements will buckle with moisture.

The most difficult part of the construction is the printed circuit used for the tachometer. If you do not have the means of etching such a board, or a friend who can do it, you can use the perforated phenolic board listed as an alternate in the parts list. If you use a perforated board, you must of course wire between the connections shown in Fig. 7 with hook-up wire. Use rivets or eyelets at the connection points, and put the hook-up wire on the back side of the board. When the wiring on the board is completed, mount the board behind the meter on ½ inch standoffs. If metal standoffs are used, be sure they do not ground any of the wiring. Mount BA1 beside the board.

Fig. 4 shows the completed analyzer. You will notice that there are connectors mounted on the back of the chassis for the input and battery cables. These are optional with the builder, and should only be used when it may be necessary to remove the analyzer frequently from the car. In permanent installations, rubber grommets can be used, and the cables connected directly to the analyzer.

Other components not included on the printed board are mounted on two terminal strips, one on each side of the unit. When these components are mounted, the wiring can be completed. Two 8-32 bolts are installed head down, one on either side of the chassis, extending upward. These bolts are used to mount the analyzer to the underside of the dash.

Three cables must be run to place the analyzer in operation. Two of these go to the engine, and the other connects to the battery fuse block, under the dash. Fig. 8 shows the method of running the engine cables to the

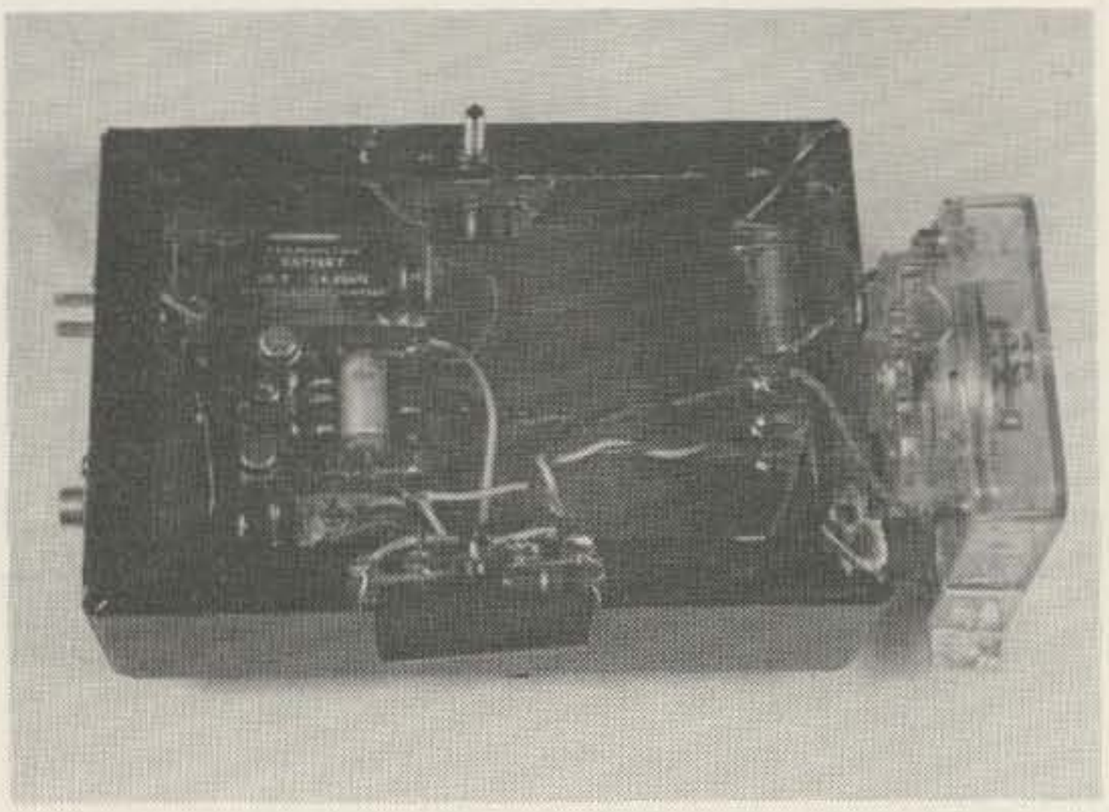

Fig. 4: Inside view of the analyzer.

rear; in this case on a Corvair. The first of these cables is a 15 foot piece of RG-58/U coaxial cable. Ground the shield at the analyzer end, and leave the shield unconnected at the other end. The center conductor of the coaxial cable connects to the high side of the ignition points (the low side of the coil) as in Fig. 9. The center conductor goes into the analyzer circuit as shown in Fig. 6.

The second cable to the engine can be any type of two conductor insulated wire, such as

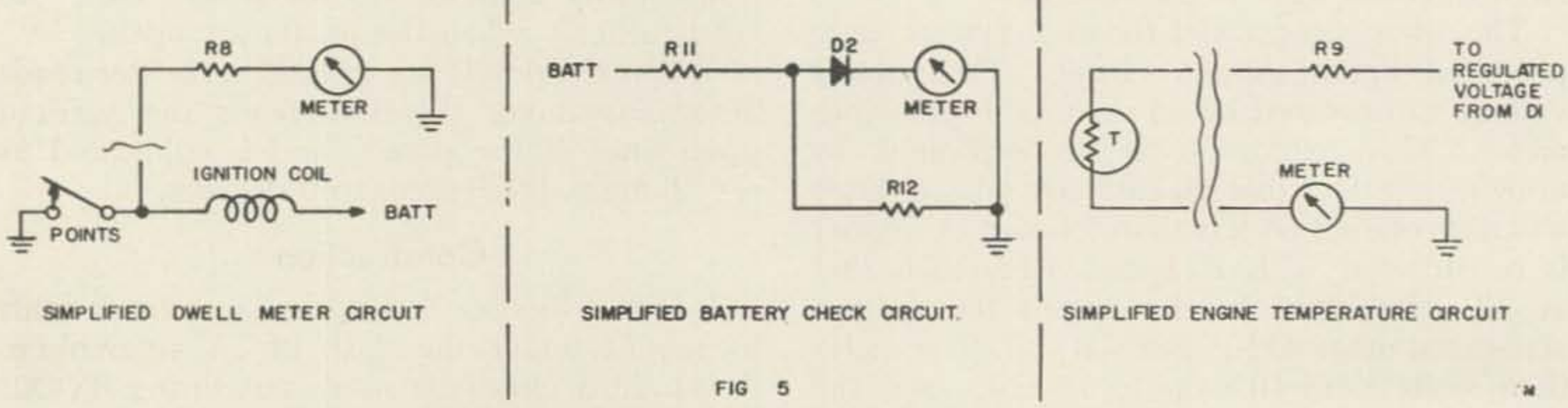

Fig. 5: Simplified schematic of the temperature, battery, and dwell meter circuits.

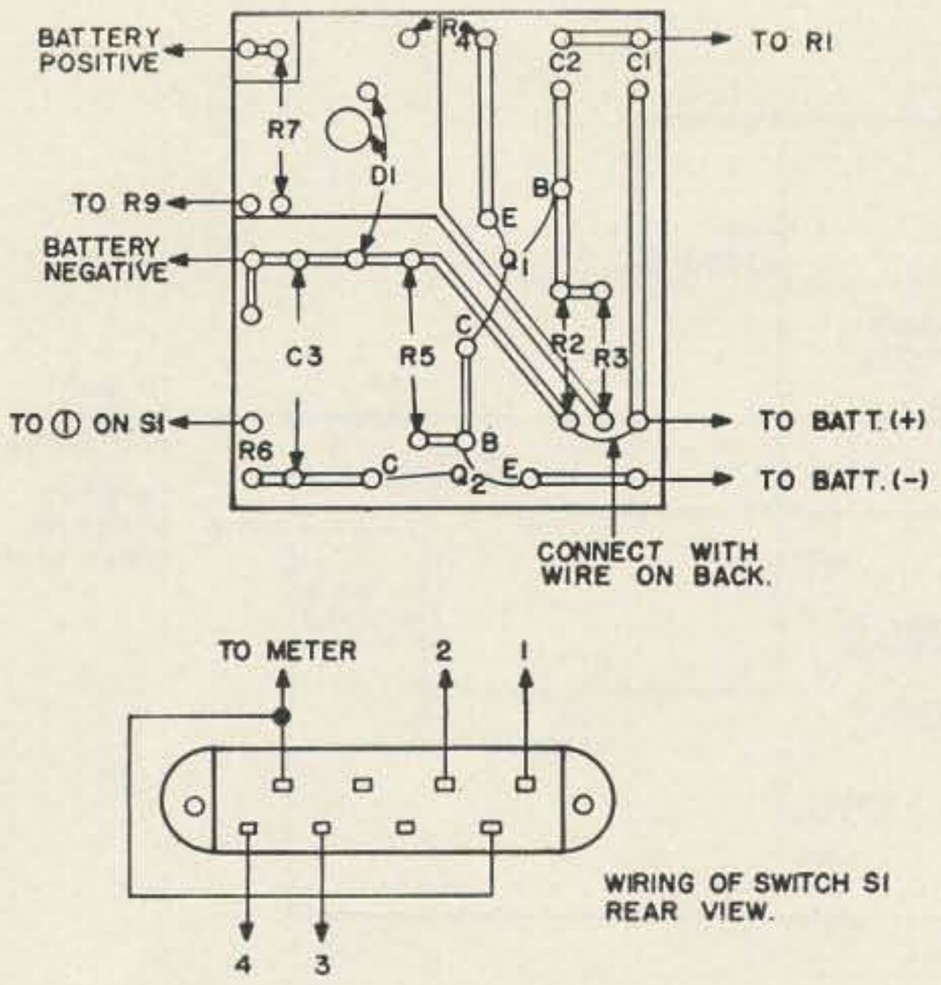

Fig. 7: Schematic drawing of printed circuit board and wiring on S1.

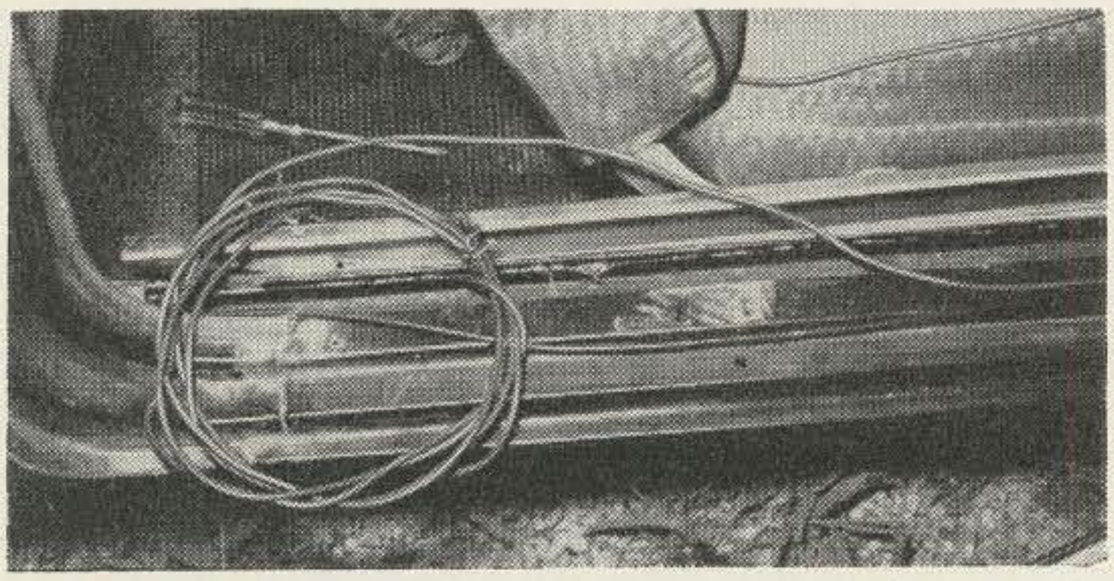

Fig. 8: Photo showing cables in channel to rear engine for tachometer and temperature circuits.

lamp cord. It connects to the thermistor which is mounted on the engine block. This thermistor is a small bead, about 1/16 inch in diameter, mounted in a slender glass tube, ⅛ inch in diameter and 1 inch long. To make it more rugged, and easier to handle and mount, put the thermistor in a brass or copper tube, and seal it in place with epoxy. Longer wires should be connected to the present thermistor wires. I used a brass tube ¼ inch in diameter and 2 inches long. A 3/16 inch hole was bored to mount the thermistor, and then the brass rod was clamped to the engine block.

The third cable supplies power to the instrument. One conductor supplies power to the analyzer, through the ignition switch, while the other conductor supplies power to the lamp in the unit, through the panel light switch. Fig. 10 illustrates the method of picking up these voltages from the fuse block. None of the cable lengths are critical.

Calibration

Refer to Fig. 5 and 6. First of all, the calibration methods will be given. Then conversion to 6 volts and positive grounds will be discussed.

NEW from P&H

MODEL DI-1
RF
DISTORTION
INDICATOR

- Specifically designed for correct adjustment of linear amplifiers, SSB exciters or transmitting converters.
- Displays RF trapezoid or RF envelope patterns. Uses 3" scope tube with full mu-metal shield. Green filter provides unusually sharp display, even in bright light.
- Trapezoid pattern compares detected envelope of exciter with RF envelope of amplifier or transmitting converter.
- The accessory Two-Tone Plug-In oscillator Model TT-1 provides the signal when making adjustments to the amplifier or transmitting converter.
- No modifications or internal attachments to exciter or amplifier required. Rear connections provided for 50-70 ohm coax lines.
- Operates 160 thru 6 meters. NO TUNING required. Handles any power 5 watts to 2 KW PLUS.
- Built-in, hum free power supply for 117 VAC.
- Comes completely wired and tested, with all tubes and ready to operate.

Amateur Net Price.....MODEL DI-1...$99.95
MODEL TT-1...$19.95

P&H ELECTRONICS INC.
424 Columbia Lafayette, Ind.

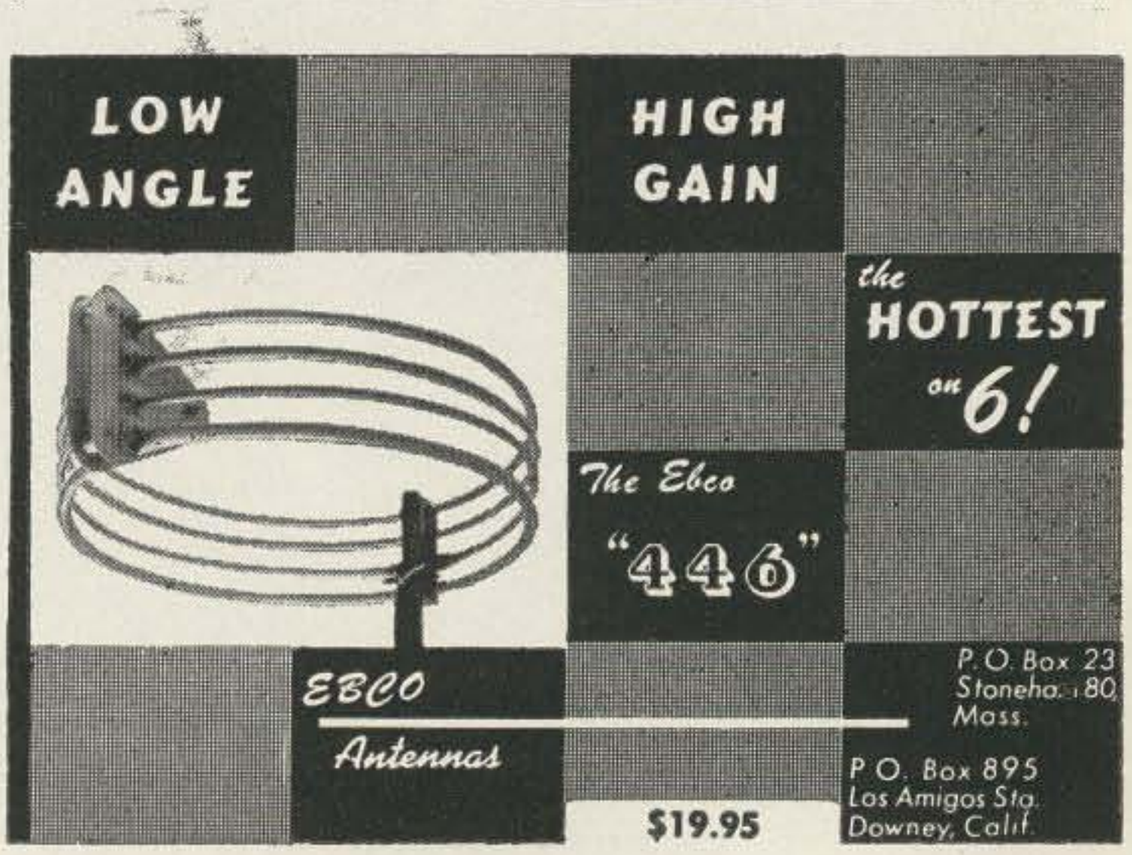

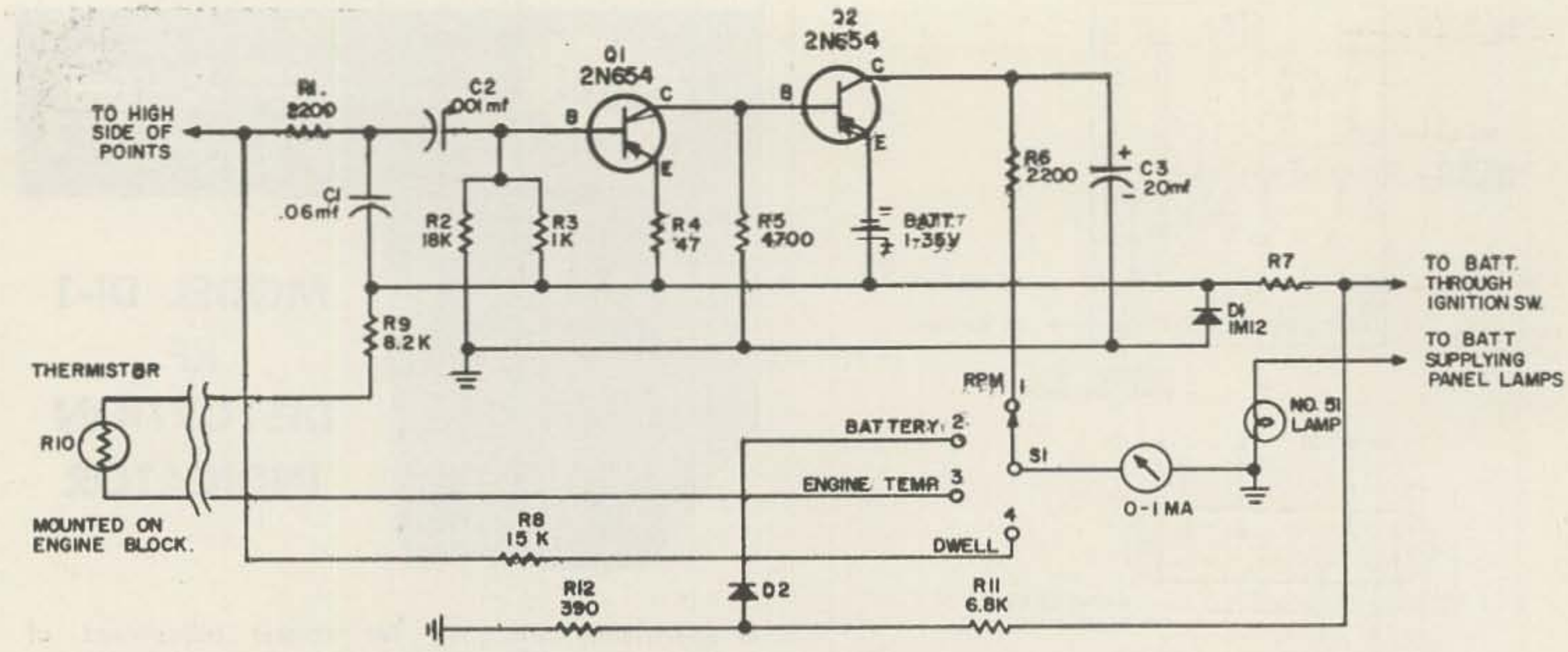

Fig. 6: Complete schematic of analyzer.

To calibrate the tachometer circuit, you must first understand how it operates. Connected to the points, it is a counting circuit, which counts every time the points close. On a 4 cycle 4 cylinder engine, the points operate twice for every engine revolution; 3 times for a 6 cylinder engine, and 4 times for an 8 cylinder engine. Remembering this fact, connect the input of the tachometer to a 60 cycle source such as the ac line. (If you use a common outlet there may be a shock hazard; use an isolation transformer.) Put a 0.02 mfd capacitor in each side of the connection. The ac line will supply 60 counts per second to the tachometer. This will correspond to 1800 RPM on a 4 cylinder engine, 1200 RPM on a 6 cylinder engine, and 900 RPM on an 8. Adjust R6 until the meter reads correctly.

To calibrate the temperature circuit, use the values shown on the schematic to begin. Operate the engine until it has reached normal temperature. Now adjust the value of R9 until the meter reads mid-scale. Color the HOT section of the meter scale red. An air-cooled engine will heat very quickly when the air flow is stopped or reduced. This indicator will change into the HOT zone rapidly if the engine overheats.

The same procedure is used with the battery circuit as with the temperature circuit. A voltmeter is placed on the battery as an aid to calibration. When the battery reads 12 volts, adjust R12 until the meter reads mid-scale as before.

The dwell meter circuit calibration is harder in that it is relative to the present condition of your points. If they are not new, either file them smooth or replace and then gap properly

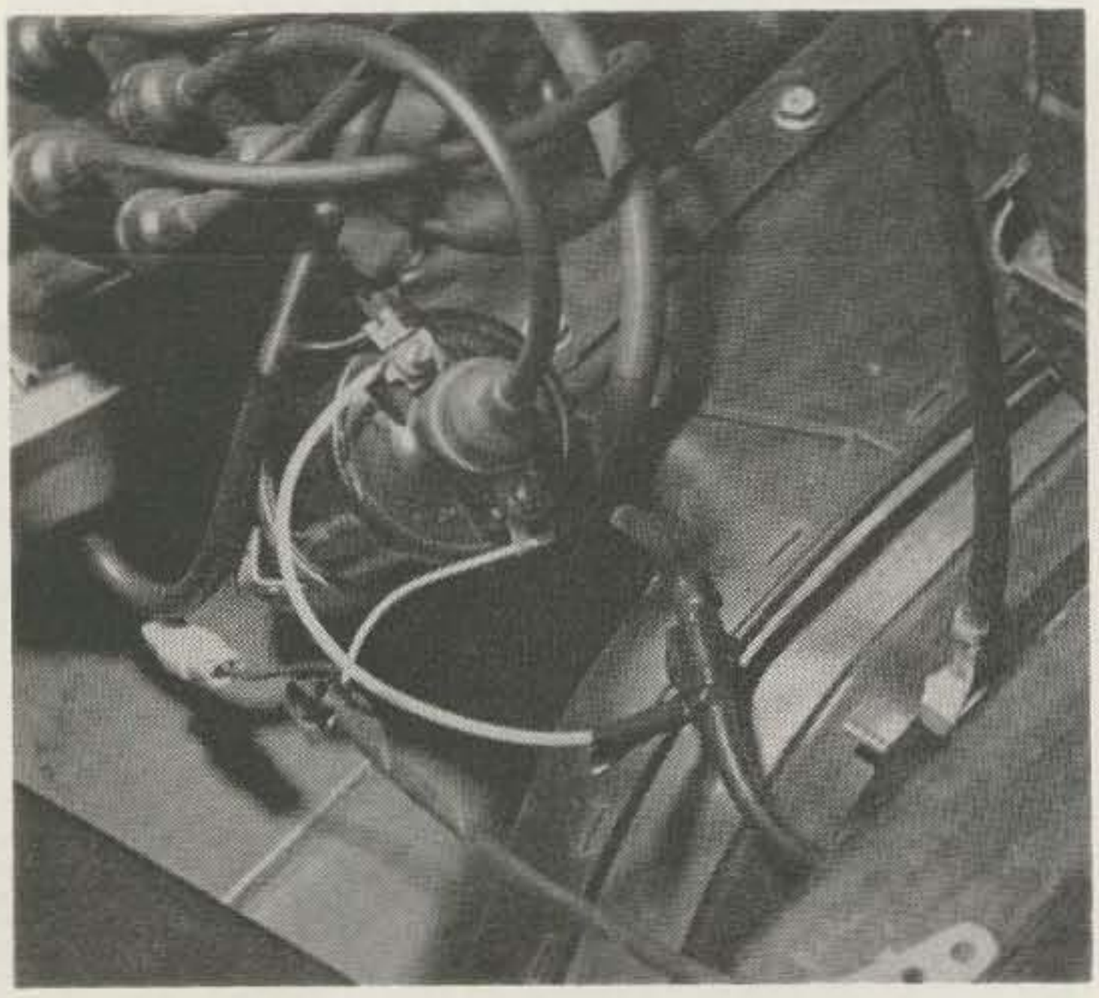

Fig. 9: Photo showing connection of RG-58/U to low side of coil.

Fig. 10: Battery pickup on fuse block under dash.

with a gauge as you would normally do. Then adjust the value of R8 until the meter reads the correct dwell for your ignition system. From then on, the points condition is readily apparent by variations in the meter reading. You can get a much more accurate check on pitted points in this manner. The reading is not accurate, however, if the engine speed exceeds 1000 RPM.

Positive Ground Systems

On autos with positive grounds, the following changes must be made for proper operation. First, use 2N214 (NPN type) transistors in place of the 2N654. Reverse BA1; reverse D1 and D2; reverse the meter; and reverse C3.

6 Volt Operation

For 6 volt operation you must make these changes: first, eliminate D1 and R7; then change the resistor values as shown in the parts list.

. . . Henry

Parts List

Wattage and voltage minimum.
C1—0.06 mfd, 600 wvdc, paper tubular
C2—0.001 mfd, 400 wvdc, ceramic
C3—20 mfd, 25 volt, electrolytic
R1—2200 ohms, ½ watt carbon resistor
R2—18 kilohm (12 volt battery); 10 kilohm (6 volt battery), ½ watt carbon
R3—1000 ohms, ½ watt carbon
R4—47 ohm, ½ watt
R5—4700 ohm (12 volt battery); 3900 ohm (6 volt battery), 1 watt carbon
R6—tachometer calibration resistor; 2200 ohm, 1 watt for 6 cylinder engine with 12 volt battery
R7—470 ohm, 2 watt carbon
R8—dwell calibration resistor; 15 kilohm, 1 watt for 6 cylinder engine with 12 volt battery and 33 degree normal dwell angle.
R9—temperature calibration resistor; with air cooled engine and 12 volt battery, 8.2 kilohm, 1 watt.
R10—thermistor, Glennite type 51PA1, 100 kilohm, bead in glass probe. Available from Lafayette Radio.
R11—6800 ohms (12 volt battery); 3900 ohms 6 volt battery), 1 watt.
R12—battery calibration resistor; 390 ohm, ½ watt for 12 volt battery.
S1—slide switch, 1 circuit 4 position, Lafayette stock #SW-74 or equivalent
M—1 milliampere meter, edgewise type, Lafayette stock #TM-21 or equivalent
D1—Zener diode, Motorola type 1M12, available from Lafayette Radio Corp.
D2—silicon diode type 1N536 or equivalent
Q1—2N654 transistor (negative ground); 2N214 (positive ground)
Q2—same as Q1
Chassis—Lafayette #MC-159 or equivalent
Printed board—Lafayette MS-519 or equivalent (alternate) Perforated board—Lafayette MS-304 or equivalent
Rivets (eyelets for board)—Lafayette MS-732 or equivalent
Lamp—with 12 volt battery, type #53; with 6 volt battery, type #51, either with socket.

All above listed parts available from Lafayette Radio Corp.

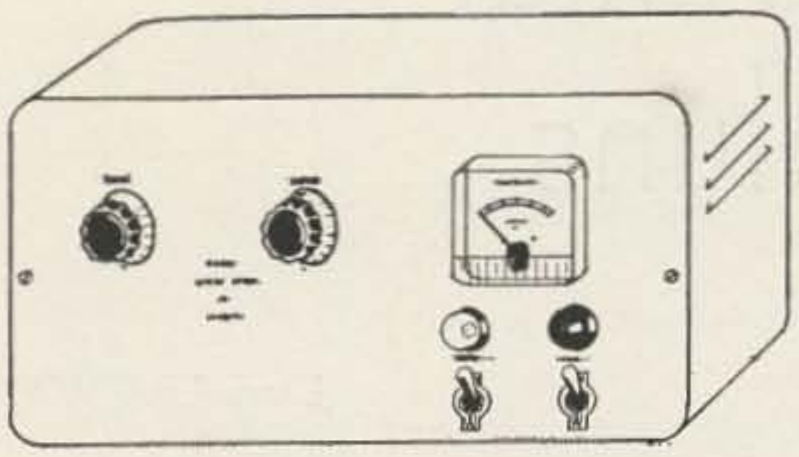

Our New Model 1062

for 6 & 2 Meters

This new model will give up to 500 watts AM & CW linear, up to 1000 watts pep on 6 & 2 with a 7034 final. 60 C.F.P.M. blower. Requires approximately 5 watts drive on 6 & 2. Voltage required—plate 800 to 2000 at 250 ma, screen 300 volts, bias—50 volts.

Price—**$199.95** less power supply.

Power supply **$119.95**
Both only **$319.90**

J&D LABS 73, Hwy. 35 Eatontown, N. J. (201) 542-0840

JEFF-TRONICS

for the finest in Ham Gear and Military Surplus Electronics.

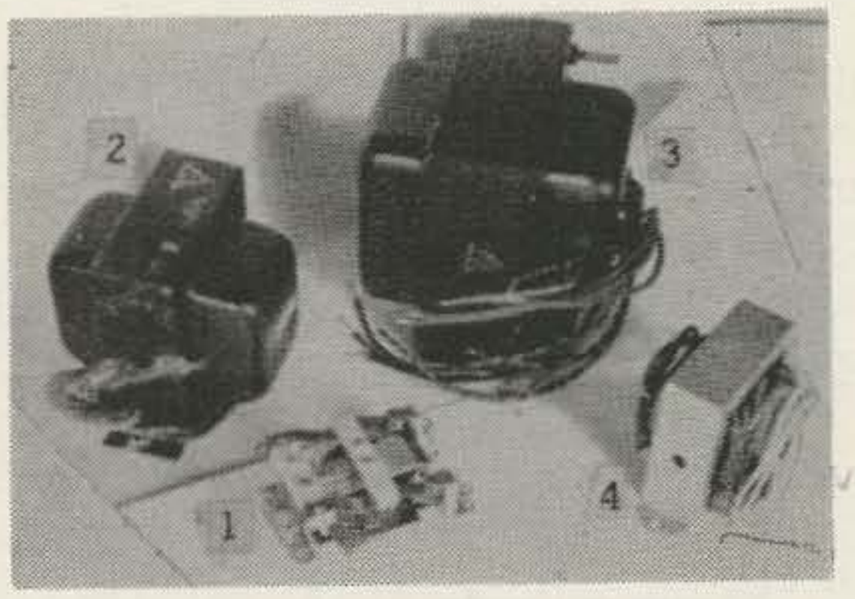

Antenna Relay, ceramic insulated, DPDT 15 Amp. contacts. 2" x 3" x 1¾". Specify coil voltage, 12V. dc, 6V. AC, 115V. AC. $2.50 (1)
RF Cable, 10' 3" long. RG-8/U with UG-21/U type N connector on each end. 4 lbs. $1.25 each, 10 for $10.00.
Audio output trans. 8000 ohms P-P to 4, 8, 16, 500 ohms. 15 watts. Good response to 15 Kc. 3" x 3½" x 3½". 4 lbs. $2.00. (2)
Power trans. 395-0-395V. 200 ma., 5V. 3A., 6.3V. 3.3A. 3¾" x 4½" x 4". 7 lbs. $4.00. (3)
6 BQ5/EL 84 tubes. Brand new, made in Germany. $1.00.

The following 2 items are made for us, to our specs.

Filament trans., 2 windings each 12.6V. 1 Amp. 2¼" x 2" x 2¾". 3 lbs. $1.95. (4)
Power trans. 125V. 20 ma., 6.3V. 0.6A. 1⅝" x 2⅞" x 1½". 1 pound, $1.50 (Looks similar to 4 above)

Please add ample postage, and in Ohio add 3% sales tax. Any excess is refunded.

In our new equipment dept., we have in stock Drake 2B receivers, New-Tronics "Hustler," National receivers, Hy-gain antennas, Finco antennas, Premier chassis & cabinets, Ameco, Sonotone.

4791 Memphis Ave., Cleveland 9, Ohio, SH 9-4237

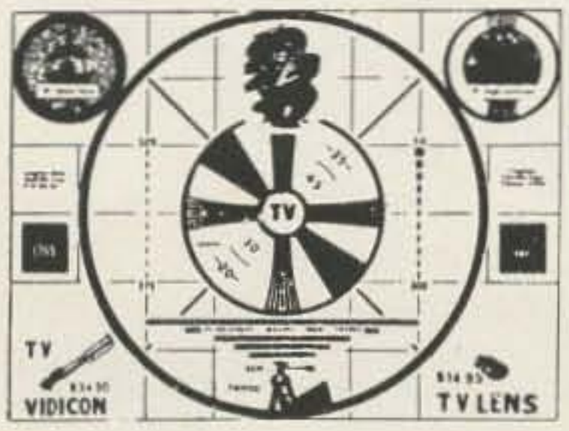

TV - CAMERA BUILT AT LOW COST *DETAILS* 50c

DENSON ELECTRONICS CORP.
Box 85, Rockville, Conn.

Coaxial Baluns

Larry Levy WA2INM

THE HIGH LOSSES of coax on the VHF and UHF frequencies make the use of open wire transmission line (ladder line) very practical and economical, especially considering the high cost-per-watt on 144 mc and the even higher cost-per-watt on 220 and 432 mc. Ordinary 300 ohm twinlead will work, but the tubular polyfoam is recommended. The lowest loss possible can be achieved by the use of ladder line. The loss of this line is very low compared to coax. At 2 meters, the loss of 100′ of RG8/U is about 3½ db. The loss of 300 ohm ladder line is about ½ db for the same length. Translated into power, this means that about twice the power reaches the antenna with the ladder line. Losses on the other bands are proportional to the frequency. 300 ohm ladder line does not seem to be a standard item but it is available from Lafayette Radio. The cost for 100′ is only $1.90 (Lafayette stock no. WR-125) which is so much more economical than RG8/U that it would pay to use it even if the losses were equal.

Most transmitters are designed to load into a 52 or 72 ohm unbalanced line (coax) and not into a 300 ohm balanced line. A coaxial half wave balun can be used to match the ladder line. The baluns have an impedance ratio of 4:1, so if 72 ohm coax is used, the resulting impedance will match the 300 ohm line quite well. The impedance can be changed back to 72 ohms by another balun connected in reverse at the antenna end of the line. This is necessary if the antenna is gamma matched, etc. If 52 ohm line is used, the resulting impedance is 200 ohms which will match 200 ohm twinlead (KT-200, etc.) or beams that are "T" matched.

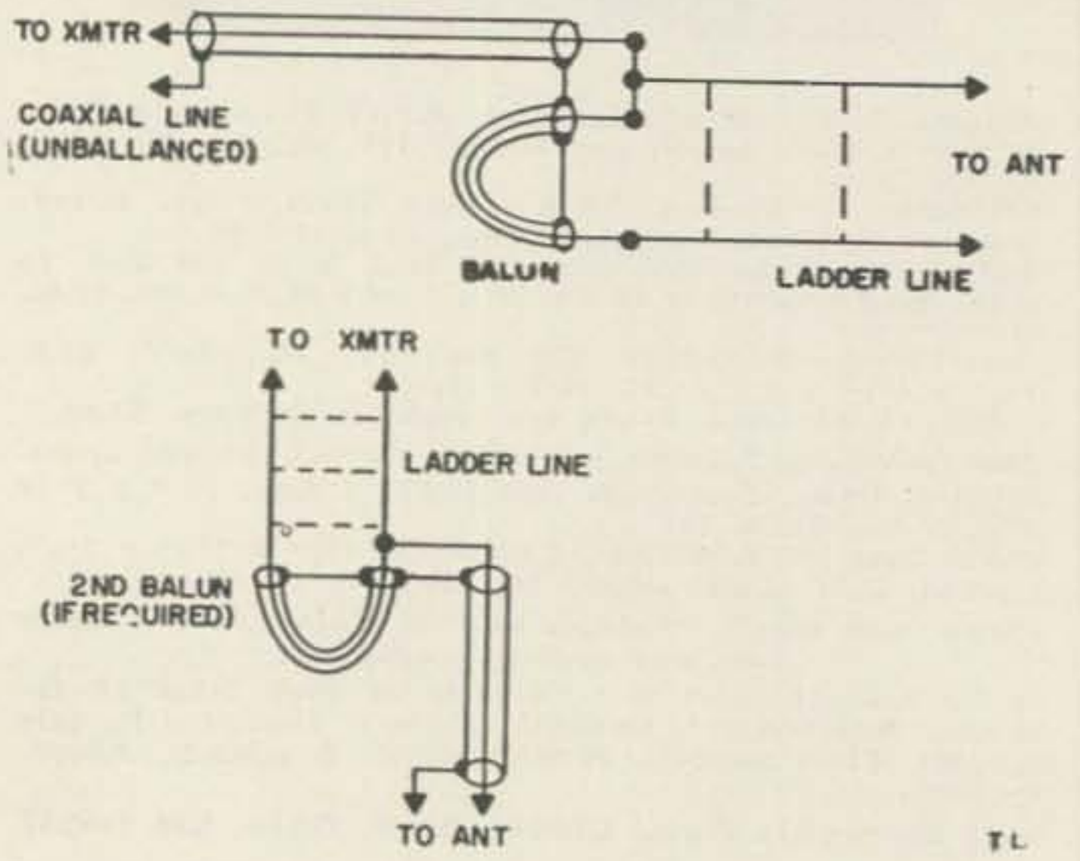

TL

By the use of ladder line and impedance matching baluns, the required impedance can be obtained with a substantially lower line loss than can be gotten with coax. Without investing any extra money in your rig, you can double your ERP on 2 meters (if you are using 100′ of RG8/U) by just replacing the coax with ladder line. On the 432 mc band, RG8/U has a loss of approx. 6-8 db per hundred feet. The 300 ohm ladder line has a loss of less than 1½-2 db for 100′ of line. This means that with RG8/U, only *15-25%* of the power reaches the other end of 100′ of coax. With the ladder line, over 75% of the power reaches the antenna with the same length of line. On a band where there is a power limit of 50 watts, the power lost in the line is irreplaceable as it cannot be made up by increasing the input. Even if it could be replaced by increasing the input, power at this frequency is *expensive* to generate and the extra power could be put to much better use than heating a length of coax. The losses become important on the receiving end where there is a fixed amount of tube noise (as low as it is) and every bit of attenuation by the transmission line reduces the signal-to-noise ratio that much more. (The same amount of noise and less signal.) If a weak signal is received at the antenna, there is very little chance that it will be heard if coax is used because of the reduction of the useful signal-to-noise ratio.

If there is a situation where a 432 mc signal reaches the antenna at a level that is 4 or 5 db higher than the front end noise of the converter and 100′ of RG8/U is used for the transmission line, the signal will not be heard (the signal will reach the converter 6-8 db weaker because of the line attenuation and will be 1-4 db below the noise). If ladder line is used (with a loss of less than 2 db), the signal will be out of the noise by 2 or 3 db. The example cited is far from uncommon and having a low loss transmission line will make the difference between no QSO and solid copy many times. The advantages are multiplied when low loss lines are used on both ends of a QSO.

The lengths for the various bands are given below.

50Mc.–76" low end, 74½" high end
144Mc.–26½"
220Mc.–17½"
432Mc.–8⅞"

. . . WA2INM

SIX METER S S B

kit only ..... $59.95!

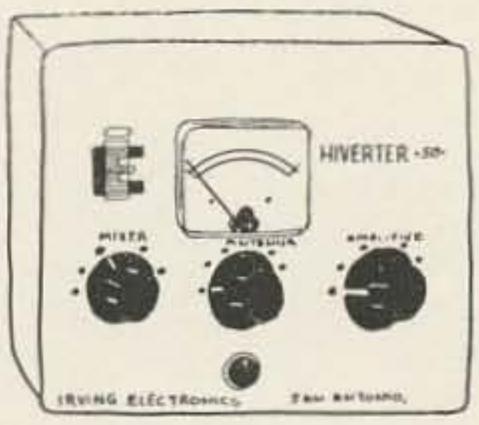

HIVERTER—50

6CL6 osc. **5763 mixer**
6146 amp. **2 OB2 regulators**

SSB—DSB
AM—CW

SIDEBAND extends your range amazingly . . . gives you VOX operation . . . makes amplifiers extremely simple for higher power. SIDEBAND gets through first when the band starts to open . . . even works through aurora flutter. Now you can go on sideband on six meters with the Hiverter with utmost simplicity. You'll need a source of 20 meter sideband, the HI-VERTER and a power supply. Any of the popular sideband exciters or transceivers will give you the ten watts needed for the HIVERTER 50. The $29.95 Heathkit HP20 power supply delivers the voltages needed: 600 vdc @ 150 ma., 300 vdc @ 60 ma., 130 vdc bias, and 6.3 vac @ 2.65A.

The HIVERTER 50 will run about 50 watts PEP input (30 watts output) on sideband, about 40 watts input on AM phone and 50 watts on CW. You can work that CW DX and all the transceivers with this unit . . . and still be ready when the band starts to open up to blast away on SSB.

The HIVERTER 50 is available wired and tested, complete with all tubes and crystal, less power supply, for $99.50
HIVERTER 50 KIT, complete with tubes, crystal and two prewired and tested printed circuit modules (very little to do, really), less power supply $59.95

PREVERTER 50 & 144

THE BEST PREAMPLIFIERS AVAILABLE AT ANY PRICE — TRANSISTORIZED — 12 volt. NO NEED FOR EXPENSIVE HIGH VOLTAGE SUPPLIES — LOW NOISE FIGURE—

6 or 12 Meter model. . . **$14.95** post paid.

KITS
MAILED POSTPAID
ANYWHERE IN USA.

Send for free list of more than 80 printed circuit kits.

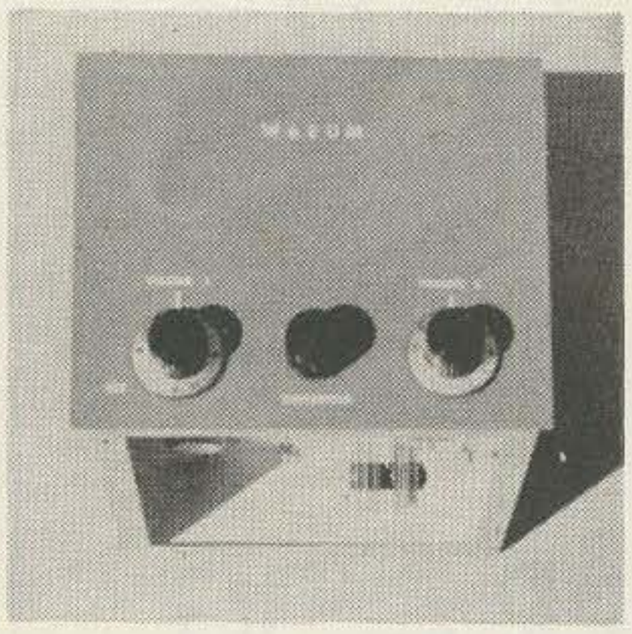

Selectivity Plus

Don Wherry W6EUM
2121 Grand View Drive
Camarillo, California

WITH the addition to our ranks of hundreds of new amateurs each month the time is rapidly approaching, if in fact it is not already here, when it will be nearly impossible to carry on a conversation with anyone but those with the loudest signals. The only solution to that problem, it would seem, is to utilize either greater and greater receiver selectivity or some other spectrum saving device. SSB with its single sideband and reduced bandwidth characteristics has allowed our receiver selectivity to approach the optimum for fone, but let's look at the CW picture as it stands today.

A selectivity curve for a CW receiver could be obtained which would have a half power point (3db) of one to two hundred cycles. This bandwidth might be adequate, but let's examine such a situation. To obtain such selectivity the passband must be very sharply peaked, which presents a knife edge center frequency. This is great except for one small detail—no one could copy the code passing through because of the excessive "ringing" of the high Q circuits necessary. This means that the narrowest usable passband must be several hundred cycles wide at the 3db point to be even remotely usable, and even then the ringing presents a difficult and tiresome experience to the operator. This ringing has been alleviated to some degree in the flat top characteristic curves of the mechanical filters, and by the use of low frequency *if* strips, but again there is a limit to the narrowness of the passband which will allow a readily readable signal to pass. It becomes obvious, therefore, that some new approach is necessary if we are going to improve our lot—which brings us to the subject of this article.

Several years ago a method of improving our CW reception was presented which utilized

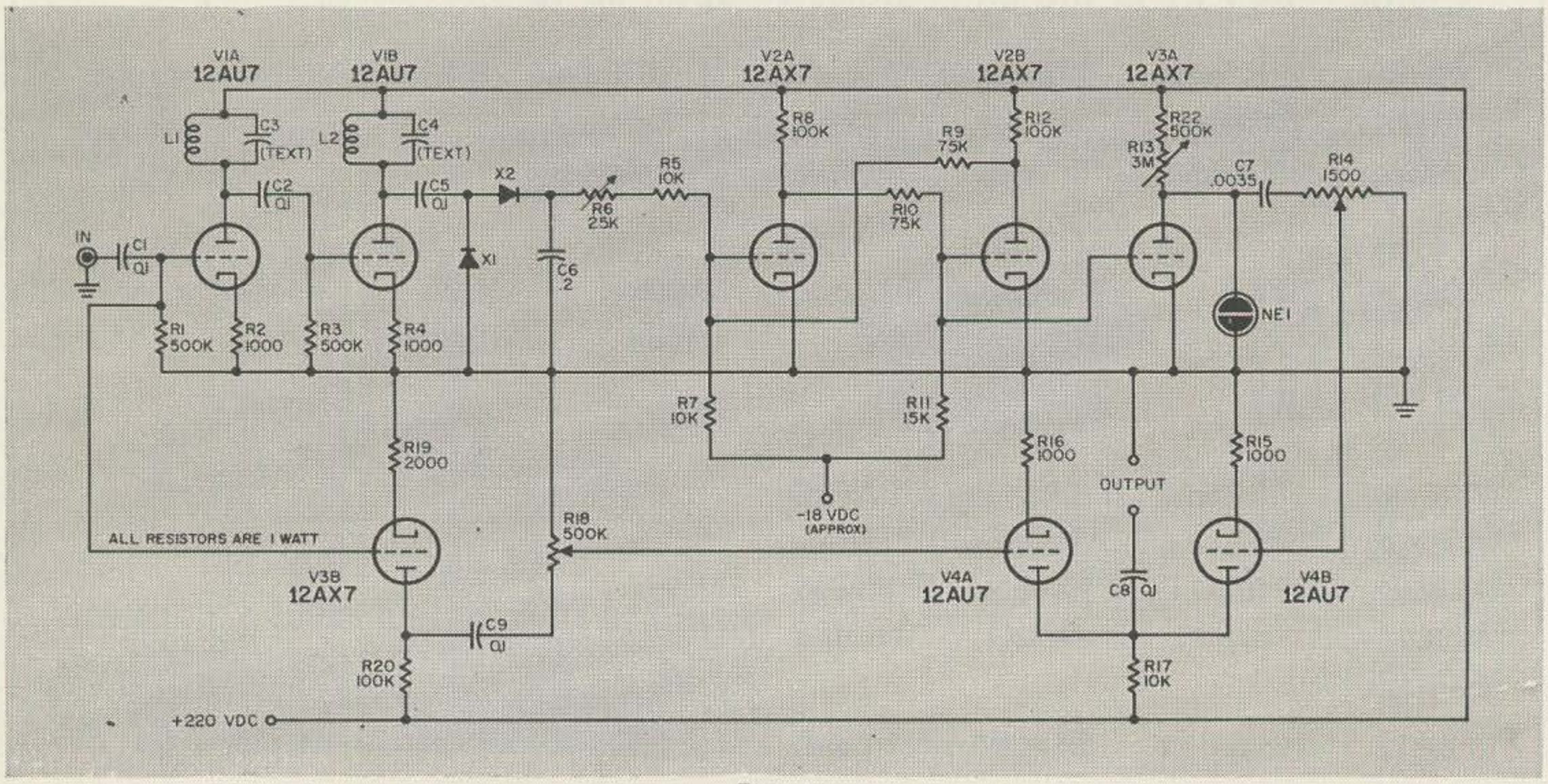

Fig. 1

The HAM-M gives you both!

Right from the shipping carton, the HAM-M is ready to use with almost any antenna/support structure combination. That's **versatility!**
What's more, our warranty records show that the more than 10,000 HAM-M rotors now in service have logged more than 268 million hours of service. That's **dependability!** Of course, we've made design changes along the way to improve the best, and we've made field modification kits available for servicing older units.

At $119.50 amateur net, the HAM-M is the greatest rotor value around! For technical information, contact Bill Ashby K2TKN. Your local CDE Radiart Distributor has the HAM-M in stock.

CORNELL-DUBILIER ELECTRONICS, DIV. OF FEDERAL PACIFIC ELECTRIC CO., 118 EAST JONES STREET, FUQUAY SPRINGS, N. C.

CDE

CORNELL-DUBILIER

CDE makes a complete line of the world's finest rotors: Ham, heavy-duty automatic, heavy-duty manual, standard-duty automatic, standard-duty manual...and the industry's only wireless remote control rotor system!

the principle of passing a low frequency audio signal from the receiver through a bandpass filter, rectifying this ac signal and using the dc voltage thus developed to trigger an external oscillator. In this manner the operator was hearing the triggered oscillator and not the original signal as presented by the receiver. This circuit presented an idea which seemed to have considerable promise, however the unit as described had several weaknesses as some of you who tried it found. They were, 1—inadequate filter, 2—something less than positive keying, 3—tricky to adjust and 4—no way of actually hearing the original signal from the receiver simultaneously with the keyed version. This latter feature, at first glance, might not sound important, but those of you who may have tried this device can attest to the utterly helpless feeling you experienced when the oscillator ceased to trigger and you were confronted by a deep silence, with no way of knowing if your contact had drifted up, down, or just faded away.

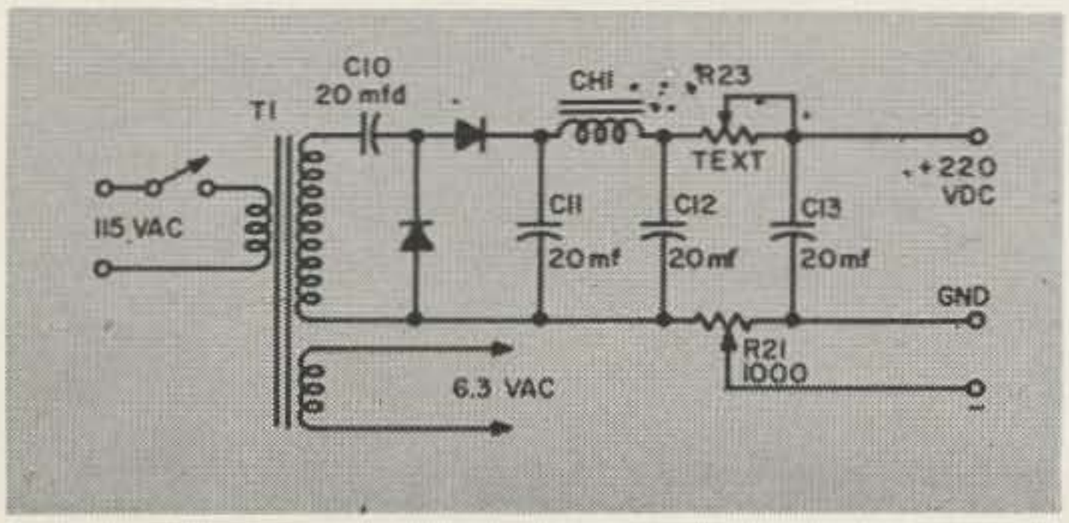

Fig. 1A

The unit to be described here is related to the original device, but has overcome the undesirable characteristics of its predecessor.

Looking at the schematic (Fig. 1) I will take you rapidly through the circuit operation and then go back and comment on the various details. The first tube in the unit, V1A and V1B, takes the signal as received from the receiver and amplifies it through a very narrow passband filter. This filter is placed in the plate circuit of the amplifier tubes and consists of two high Q inductances tuned to the desired frequence by two condensers. The signal is then rectified by two diodes in a voltage doubling circuit with the resultant dc voltage used to trigger a flip-flop multivibrator, V2A and V2B. This multivibrator then turns "on" and "off" a keyer tube (V3A) which keys a neon oscillator, the output of which is fed into the grid of V4B, and into the output of the unit. The second input channel goes to V3B where, bypassing the filter, it is amplified and passed to the grid of V4A. There it is mixed with the output of the neon oscillator and presented to the output. It is apparent even by now that this device has corrected the major difficulties incident to the original model.

A more detailed breakdown of this circuit is as follows: The first tube V1A and V1B has, as its two plate loads, a high Q tuned circuit

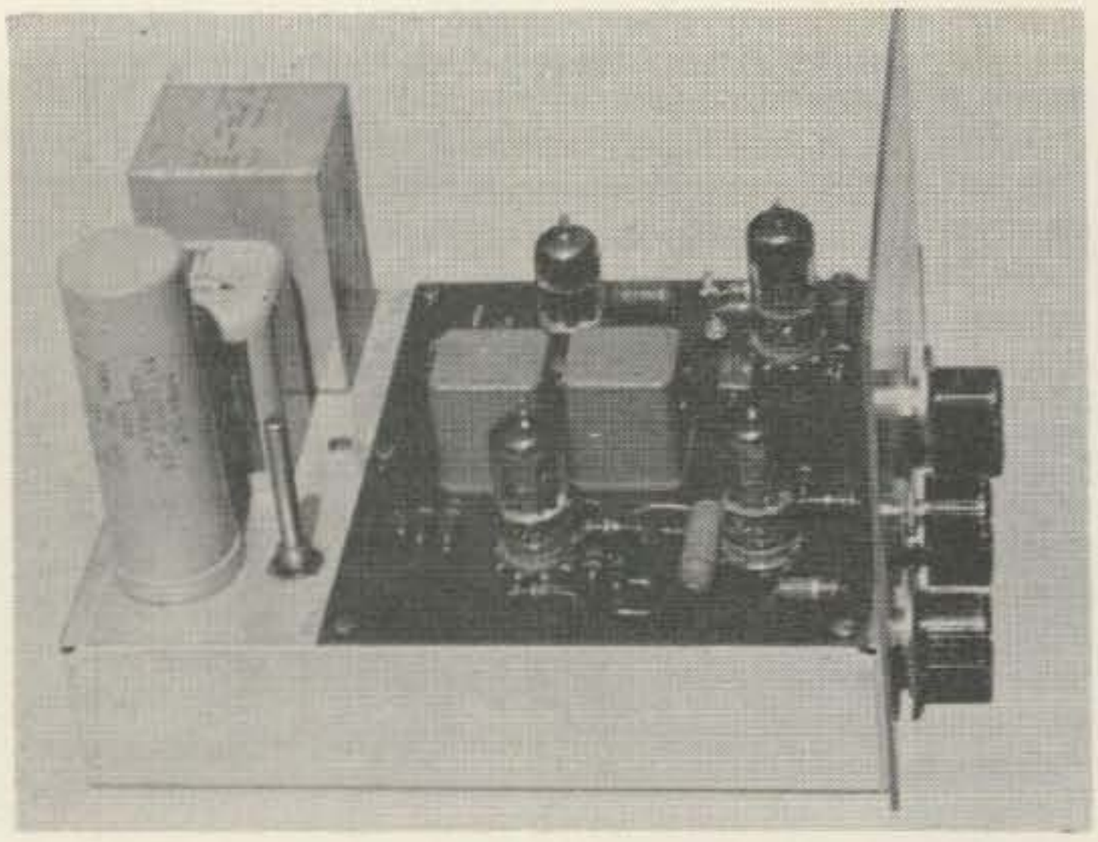

which is resonated, in this case, to 500 cycles. As you know, selectivity is a percentage situation, so to get a real narrow passband a low frequency signal from the receiver must be used. A frequency lower than 500 cycles could just as well be used if more selectivity is desired—more about that later. The two inductors used in the filter here are UTC variable inductors of the V1C type. These are roughly tuned to the desired frequency by the capacitors C3 and C4 with the final peaking done with the slugs. Any type inductors can be used, but the job of peaking will have to be done by padding the condensers and this is much harder than turning a slug. A V1C-15 will tune to 500 cycles with a condenser of 0.02 shunted in parallel. However if you wish to change the resonant frequency to a lower value use the formula $F = \frac{1}{6.3\sqrt{LC}}$ where C is in farads and L is in henrys. Remember again that the lower the resonant frequency the better the selectivity. The inductances used in this model are VIC-9 which have a low inductance requiring a rather large condenser in shunt. This lowers the Q somewhat and increases the bandpass, but even this unit has a bandwidth of 90 cycles at the 3db point.

The audio signal leaving V1B is then fed into a voltage doubling rectifier circuit which uses any good diode such as the 1N63 or the older 1N34. The diodes are connected to furnish a positive voltage output. This rectified voltage is then smoothed by C6 and fed into the multivibrator input circuit. C6, by the way, does more than just smooth the rectified voltage; the noise spikes from auto ignition, vacuum cleaners, etc., are effectively taken out by this condenser.

The multivibrator circuit, V2A and V2B, is the heart of this unit and as such warrants some detailed discussion. Going back, if you pass a square wave, such as a keyed CW signal through a high Q circuit with its high selectivity you reshape the square wave very badly. This is what causes the ringing sound.

Figure 2A shows a typical keyed CW "dot" after passing through a narrow passband filter circuit. This sloping of the start and finish shows why it is so difficult, if not impossible, to directly copy the output of such a filter. While the rectified voltage, as fed to the multivibrator, looks like "a" on 2C, if the action of the multivibrator can be made to take place at some voltage above zero as on line "x" of 2A and the neon oscillator can be keyed on at this point then the tone, as heard, will start at "c" on 2C and stop at "d." This will give an output signal shaped as shown in 2B, effectively eliminating the slope, or ringing, of the selective filter. This is done as follows. The multivibrator circuit is designed so that V2B is normally in a saturated condition. Under these crcumstances V2A, which is cut off, or nearly so, has the full plate voltage at its plate. This voltage when applied to the grid of V2B through R10, consequently holds this grid at a slightly positive (or zero) voltage. This, as mentioned, causes plate current to flow through V2B and causes a large voltage drop through R12. This lower voltage fed through R9 to the grid of V2A fails to overcome the negative bias voltage on this grid and leaves it at a negative potential, or the tube in a cut off (or nearly so) condition. This multivibrator is known as a flip-flop circuit which means that it can rest in either the condition described or in the reverse condition, in which V2A is heavily conducting and V2B is cut off. However, in this application the circuit is unbalanced which means that, while at rest, V2A will always be in the cutoff condition and V2B will always be in the heavy current carrying state. Now when a signal passes through the

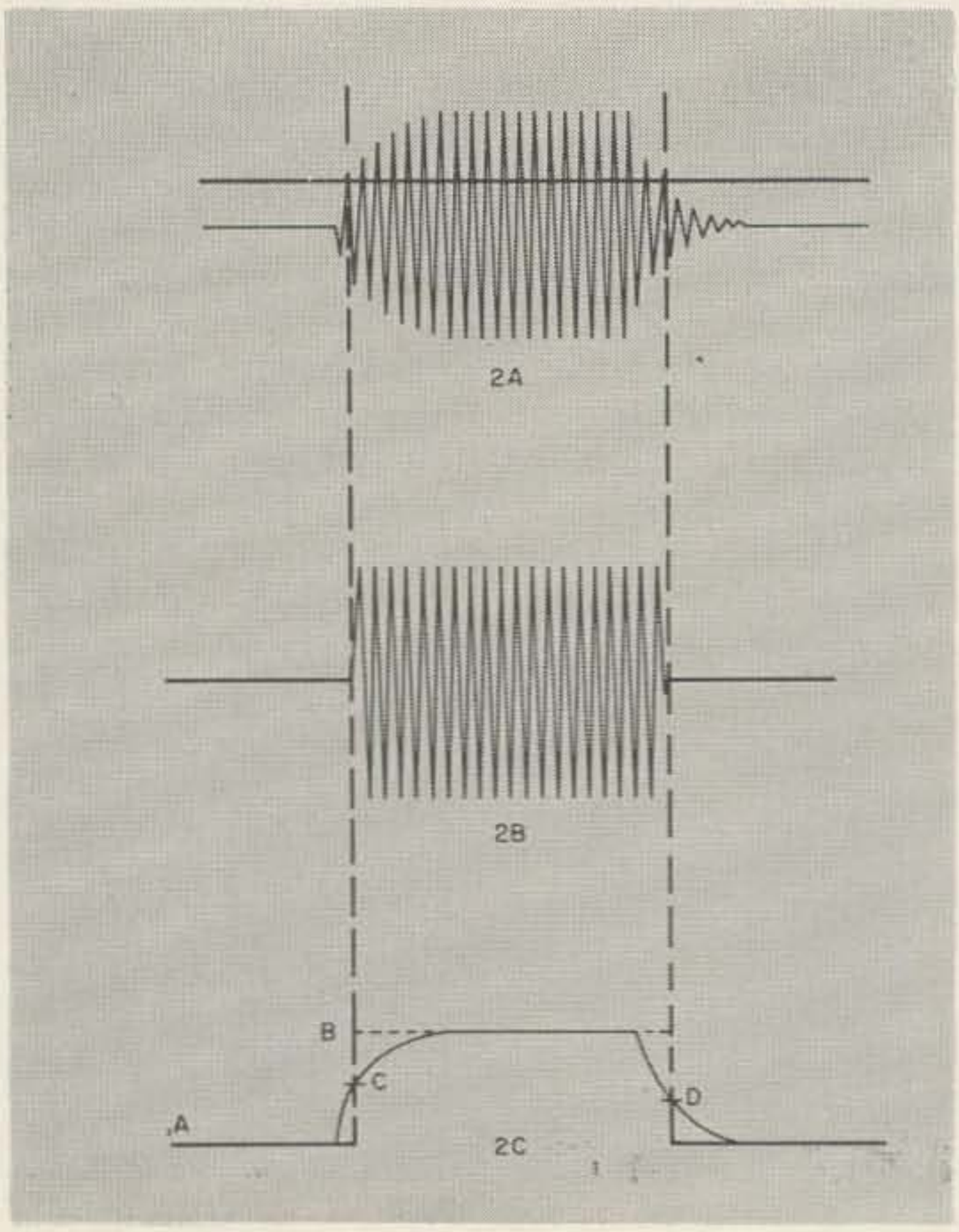

Tri-Ex

BUY THE FINEST TOWER MADE — BUY TRI-EX!

THERE IS A TRI-EX TOWER TO FIT YOUR ANTENNA REQUIREMENTS

Tri-Ex

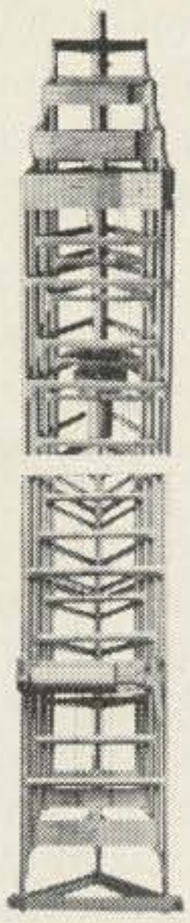

NOW! NEW LOWER PRICES ON ALL GUYED TOWERS!

EXAMPLE: TRI-EX H AND HS SERIES GUYED TOWERS WITHSTAND HEAVY WIND LOADS WITH REALLY BIG ANTENNAS TOPSIDE!

- IRON PHOSPHATE RUST PROOF UNDERCOATING PLUS EPOXY RESIN PRIMER AND BAKED ENAMEL FINISH COAT (GALVANIZED AT SLIGHTLY HIGHER COST)
- ACCOMMODATES ALL PROP PITCH AND OTHER ROTOR MOTORS INSIDE TOP SECTION
- HEAVY DUTY CRANK-UP EQUIPMENT

MODEL NO.	HEIGHT (ft.)	WEIGHT (lbs.)	NEW LOW PRICE
H-237	37	150	$140.00
H-354	54	250	190.00
H-471	71	365	270.00
HS-237	37	200	175.00
HS-354	54	305	240.00
HS-471	71	440	343.00
HS-588	88	620	475.00
HS-6105	105	870	745.00

GUY CABLE, PLATES, CLAMPS, ANCHORS, ETC. AVAILABLE IN KIT FORM AT LOW ADDITIONAL COST.

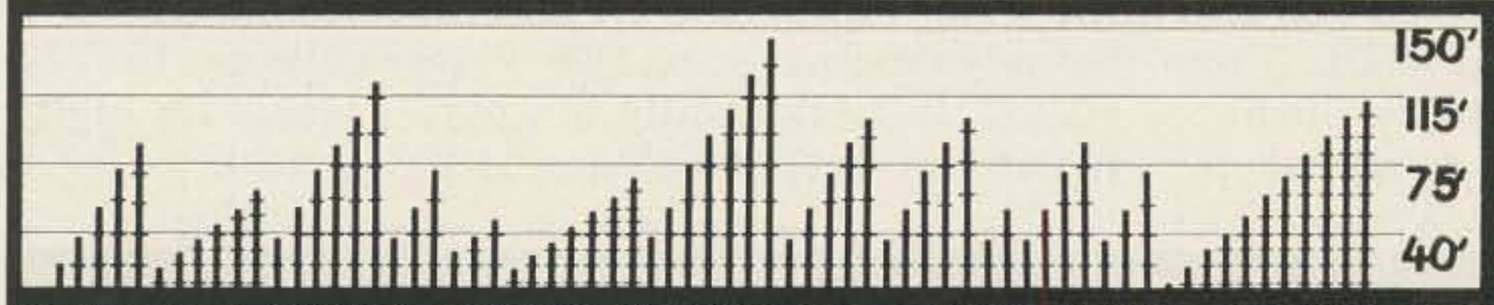

SEND FOR THE NEW TRI-EX ANTENNA TOWER SELECTOR CHART

TRI-EX TOWER CORPORATION / 127 EAST INYO STREET / TULARE / CALIFORNIA / MU 6-3411

filter and is rectified into a positive pulse by the diodes and applied to the grid of V2A it overcomes the negative bias and starts a current flow through the tube. This in turn increases the voltage drop through R8, decreasing the voltage at V2A plate which, in turn, decreases the positive grid voltage on V2B allowing the bias to take over on that tube, thus decreasing the plate current flow through its plate load resistor R12. This, of course, increases the voltage on the plate and, feeding this increased positive voltage through R9 to the grid of V2A enforces the original positive signal pulse and flips the circuit over to the opposite condition it assumed while at rest. Now when the signal is removed by the end of the dot being sent, the voltage on the grid of V2A goes down and starts the entire sequence in reverse, Forcing the circuit to flop back to its original condition. This is why this circuit is known as a flip-flop circuit, with its characteristic ability to change rapidly (a few microseconds) from one condition to the other.

Just how does this apply to this device? Let's look at Fig. 2 again. Let's say, for example, that the signal is plus 2 volts in value with the trigger level set at plus 1 volt (line "X" on 2A or at points "C" and "D" on 2C). Looking at 2C again, as the signal voltage builds up from zero to one volt (point "C") the multivibrator remains in the original no signal condition, however upon passing the one volt lever V2A starts to conduct and due to the action of the multivibrator instantly flips over to full reverse condition from the original state. At the end of the dot the voltage at the grid of V2A starts to fall as shown on 2C and as it passes point "D" the plate current of V2A starts to fall thereby reversing the sequence of events with V2B and flopping the circuit instantly back to the original condition.

Now why do we do this? We have taken a square burst of signal, representing a dot for example, and in passing it through a high Q selective circuit have destroyed its original shape and then we have reshaped it back to its original shape by the action of the multivibrator. This will allow us to use this reclaimed signal to trigger an oscillator on and off to give us a clean, positive keyed output signal thus overcoming one of the prime objections to the original circuit of a few years back.

The oscillator is a typical neon bulb relaxation oscillator comprising of R13, R23, R14, C7 and the neon bulb NE1. This circuit would be normally oscillating except for the action of the keyer tube V3A. This tube has its grid in parallel with the grid of V2B so that in a normal no signal input condition the same plus voltage is applied to its grid as is applied to the grid of V2B. This saturates the tube which causes such a large voltage drop through R13 and R22 that the neon bulb fails

to oscillate. When the signal is applied to the unit the multivibrator tube V2 flips over, which cuts off the plate current of V2B and V3A. This cut off condition of V3A removes the tube load through R13 and R22 thereby raising the voltage on the neon bulb thus allowing it to start oscillating. When the signal ends, the multivibrator flops back and stops the neon bulb from oscillating—this explains the "why" of the multivibrator.

The output of the neon bulb is then taken off R14 and fed into V4B where it is amplified and delivered to the output phones, or possibly a small speaker. A speaker will probably need another stage of amplification however.

The second channel comprising of V3B and V4A is a straight amplifier which takes the normal output of the receiver, before it passes into the filter circuit, and after passing through V3B is fed into V4A. It is there amplified and mixed with the output of V4B by the common plate load resistor R17. Either signal can then be heard, or both can be heard at once, depending upon the setting of the individual volume controls R14 and R18. For normal use R18 is set for comfortable output level and with R14 set at zero, a signal is tuned in, in the normal manner. If interference conditions require it then R14 can be increased and the receiver tuned (or the BFO adjusted) until the beat note is of the proper frequency to pass through the filter network. The neon tube will then be triggered and can be heard in the output by advancing R14. The original signal with its interference, coming in on the other channel through R18, can be eliminated by turning down that volume control until it no longer bothers—to zero if you desire. The interfering signal must be outside of the passband of the filter of course but since this band is only 90 cycles wide at the 3db points, and can be made much less than that by lowering the resonant frequency of the filter, this usually can be accomplished.

The power supply is normal with nothing critical. The only thing about it, which might be termed unusual is R21, which sets the negative bias on V2. The value of this potentiometer might have to be changed if a lower plate voltage is used. If so a 2K potentiometer should be OK. The important thing is to have the grid voltages on V2 as described. R23 can be adjusted to set the plate voltage to 220 vdc if it is normally higher, or can be omitted if the output voltage is below 220.

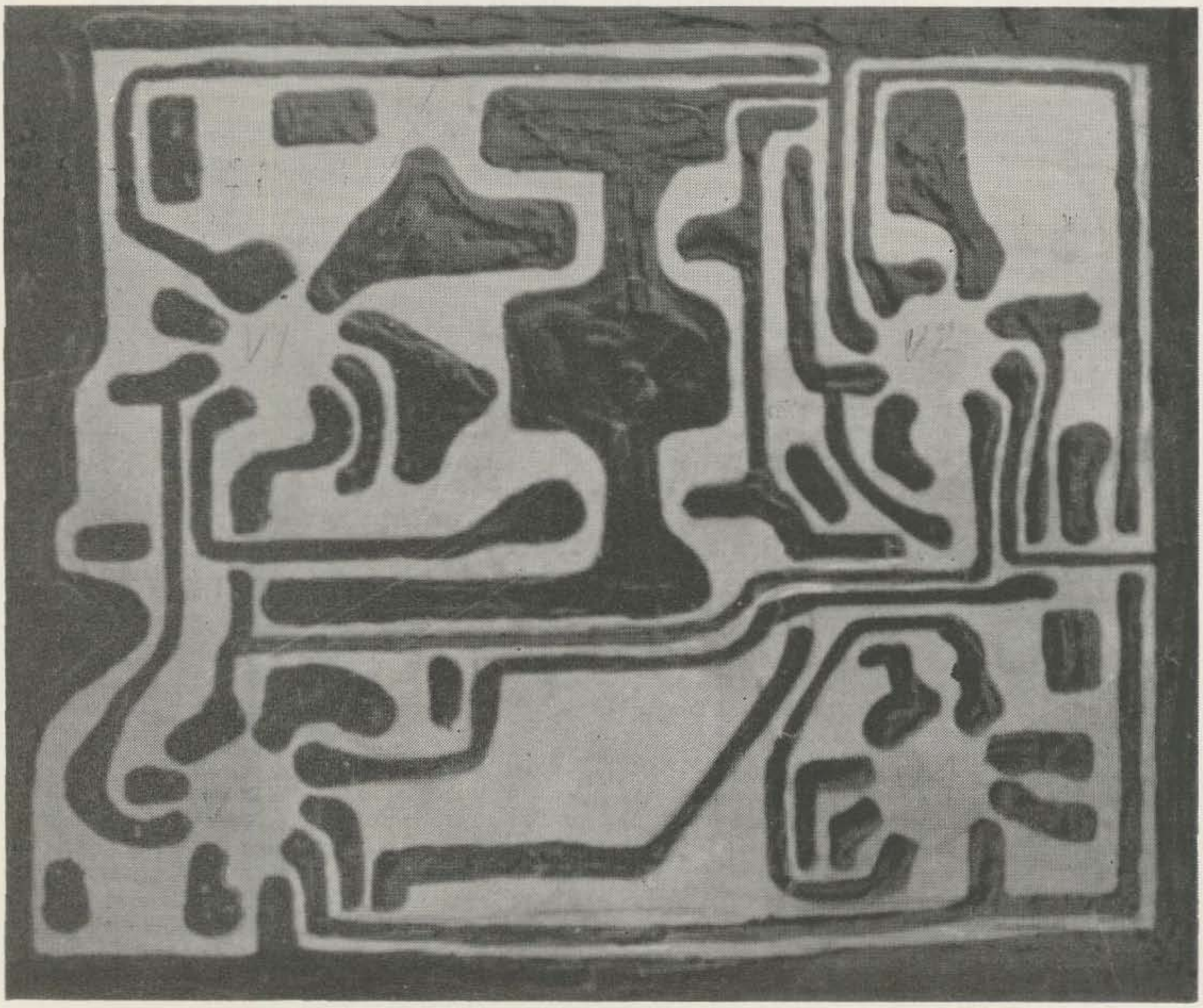

DRAKE

MODEL

2-B

$279.95

AMATEUR NET

The most talked-about ham receiver

It has been gratifying to read comments of 2-B users on their warranty cards. Here are a few . . .

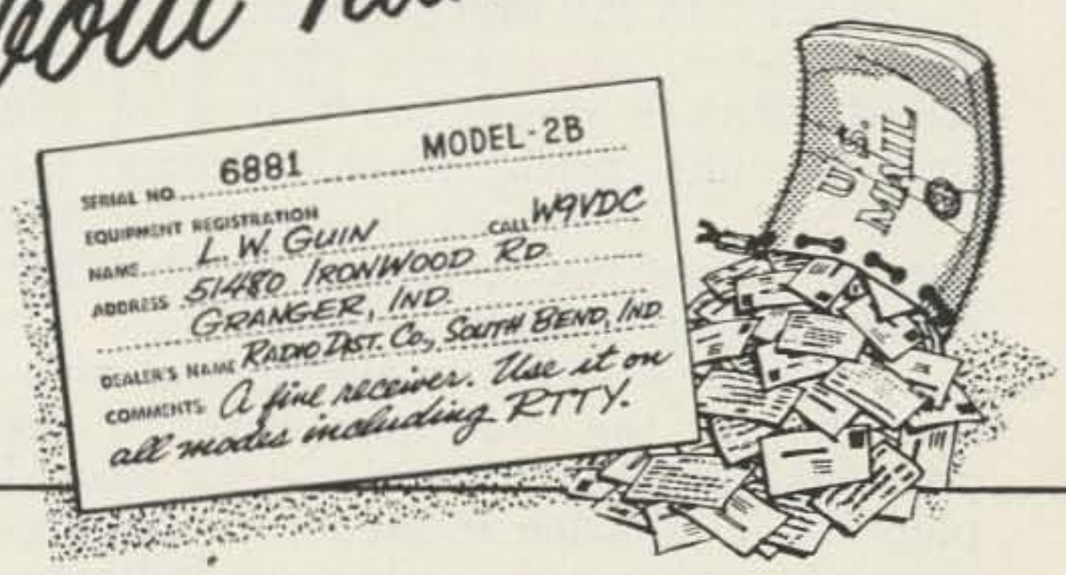
SERIAL NO. 6881 MODEL-2B
EQUIPMENT REGISTRATION
NAME L. W. GUIN CALL W9VDC
ADDRESS 51480 IRONWOOD RD.
GRANGER, IND.
DEALER'S NAME RADIO DIST. CO., SOUTH BEND, IND.
COMMENTS A fine receiver. Use it on all modes including RTTY.
U.S. MAIL

"The 2-B is not a receiver, it's HUMAN. Cuts up those novice bands like hamburgers."
K1MJS, Lexington, Mass.

* * *

"Have owned and operated many receivers in 40 years of hamming but the 2-B is the best. It has everything." **W2JJ,** New York City

* * *

"Excellent! Really amazed at its performance. Stable as a boulder, even with 'fist test.' Would be worth it at twice the price."
K6HIU, San Diego, Calif.

* * *

"Wonderful! Can't see how such a small box runs rings around my big ___" (5 months later) "After 2000 DX contacts I can't see how it performs so well at such a price and small size."
W9GFF, Chicago, Ill.

* * *

"Am studying for novice and find the 2-B an excellent receiver to pick out stations for code practice." **Alex H. Tinker, Jr.,** Scottsdale, Ariz.

* * *

"Very stable, real good AM receiver."
K5GYU, Kilgore, Texas

* * *

"After searching for a year have concluded the 2-B comes closest to perfection. Everything in it is aimed at communication effectiveness."
HP1FQ, Panama

"I've had them all and this receiver tops them all." **K6DI,** Santa Barbara, Calif.

* * *

"Particularly like the variable passband."
W6KHH, Novato, Calif.

* * *

"Excellent on SSB and CW. Have compared with receivers costing up to 3 times as much and sensitivity and selectivity of 2-B is as good or better." **WA2POH,** Rome, N. Y.

* * *

"One of the most surprising purchases I have ever made. Performance is superb in every way. First receiver ever owned that exceeds advertised claims." **W5NKE,** Jacksonville, Ark.

* * *

"In 20 years of hamming have never been more pleased. Operate 40 CW and the 2-B has the selectivity to make DX chasing again worth while." **W6WAW,** Los Angeles, Calif.

* * *

"Didn't know so much receiver could be built so compact and neat. Best I've seen for SSB. It's a pleasure to get on the air now."
W5WJQ, Thibodaux, La.

* * *

"The 2-B is my fifth receiver, but the best I've had." **LX1DE,** Luxembourg

For more information ask your distributor or write us. Coming soon TR-3 All-Band Transceiver

R. L. DRAKE COMPANY

Box 187-A
Miamisburg, Ohio

Perhaps we should go through a brief "set-up" procedure for the unit. By steps it is as follows—

1. Remove V1, V2, V3 and turn on the power supply.
2. Adjust R23 (if used) to give approximately 220 vdc to the unit.
3. Plug in a pair of fones and you should hear the neon bulb oscillating. Adjust R13 for the tone desired and R14 for the correct volume.
4. Insert V3 and allow warm up time. The tone should stop.
5. Plug the unit into receiver, or into an audio oscillator, and adjust R18 for proper volume of signal heard in the output.
6. Insert V2 and allow warm up time. No change should occur.
7. Insert V1 and allow warm up time. With no signal into the unit from the receiver, or oscillator, no change should be detected. With a signal in, if it is of the proper audio pitch, it should key the neon bulb, which can be heard in the output. Adjust the receiver gain until the noise does not trigger the unit.
8. Now tune in a signal in the normal manner and, as the tone goes through the passband of the filter the neon should plop into oscillation in step with the signal and you can hear either one individually or both at once as you desire. If you use a filter frequency of 500 cycles or lower this neon signal will plop in and plop out as you tune the receiver leaving interference noise, etc., noticeably absent.

In case, after step 4, the neon tube does not stop oscillating, check the voltage at the grid of V3A. This should read zero or slightly positive. If it is not—and after the wiring has been checked for a mistake—check the voltage on the grid of V2A—this voltage should be approximately one volt negative. In case these readings are reversed with V2A positive and V3A negative and the wiring checks out OK, the value of R11 will have to be changed. In fact it might be advisable to put R11 in as a pot. of 20K value and mount it on the back of the chassis—especially if you deviate from the 220 volts dc used on this unit. The plate voltage is not at all critical, in fact and anything from 100 to 250 volts can be used—if you adjust R11 and R21 for whatever you're using. Going back, if the grid of V3A is not zero or slightly positive with no signal input it must be made so by the adjustment of R11. Then with a signal going through the filter, the grids of V2 will flop back and forth from zero to minus. The readings should be, for V2A, from approximately minus one volt to a plus half volt or so and for V2B (and V3A) from approximately zero to three volts negative or so. These are the only critical features of the unit, and these are not especially so.

You have noticed from the photo that this unit is constructed on a printed circuit board. This is for no special reason except that I recognize this to be a good method of construction and enjoy laying out the boards. It was done in my home workshop using a small artist brush and ordinary enamel for the resist (the name for the material which covers the copper that is to be left after etching). The etchant acid was placed in a glass dish and warmed slightly before the board was immersed. This warming is not necessary, but it speeds up the process. A very mild warming is sufficient, in any event, and for best results keep stirring the acid with a wooden paddle while the etchant is working. Laying out the circuit board is not complicated, but is tricky and probably could be the subject for an article in itself. If it is desired to copy the board used here, Fig. 4 is an exact layout drawn to scale.

This completes the description of the unit. It will be found to be a very real assist in copying signals through QRN and QRM. One of the requirements is, of course, that the desired signal be not too far down in the mud. If the noise triggers the neon while you are trying to dig out the signal the device is of limited use. However, the action of C6 does a good job of eliminating noise peaks, so many times it would appear that you are, in fact, below the noise level while the unit is operating satisfactorily. Generally speaking this unit will be of the most value to the Novice or "rag chewer." It would seem that by the condition of the bands these days only Heaven can help the DX hound.

One more comment on the circuit—one resistor that shows on the schematic is R6. This potentiometer was used to set the threshold level for the neon oscillator keying and theoretically was a useful adjunct to the unit, however, in actual practice it was found to be excess baggage and it is recommended that it be omitted. The threshold is set close enough by R5 and the volume control of your receiver can be used to meet the level requirements very easily.

The unit as described, is, in fact, a prototype and any builder can probably improve upon it with a little thought. But in any event if you think you need some more selectivity for your code contacts—and who doesn't—get the old head gears turning, the soldering iron out and give it a go. . . . W6EUM

CLUB RATE

Subscriptions will be accepted at the Club Rate of $3.00 each when sent in groups of five or more. This holds for either new or renewal subscriptions. Please list names, calls, and QTH's.

Using the Rate-of-Change Noise Limiter

Larry Levy WA2INM

THE rate of change limiter is one of the first big advances in noise limiter design that we have had in quite a while. I won't go into a description of all the advantages of the limiter as Jim Kyle K5JKX, has done an excellent job of that already. (See 73 magazine, Apr., 1961, P. 16.) After looking at table 1 of Jim's article, I decided to see if those seemingly impossible figures were true. To do this, I installed a rate of change limiter in my 2 meter mobile transceiver.

The original circuit had a few faults, but these were mainly in connecting the limiter to a receiver. One problem was that there was no place to connect the AVC line, and another was that there was no way to disable the limiter, if only for comparison purposes.

The necessary modifications are shown as bold lines in the schematic. AVC voltage equals that from a standard diode detector. The diodes used were a pair of 1 N295s but a 12AL5 would probably work better.

I noticed that the addition of the limiter lowered the audio slightly so if your rig does not have spare audio gain, it may be necessary to add another stage of audio. A nuvistor will work fine and takes up very little space. Details are shown in Fig. 2. Since my trans-

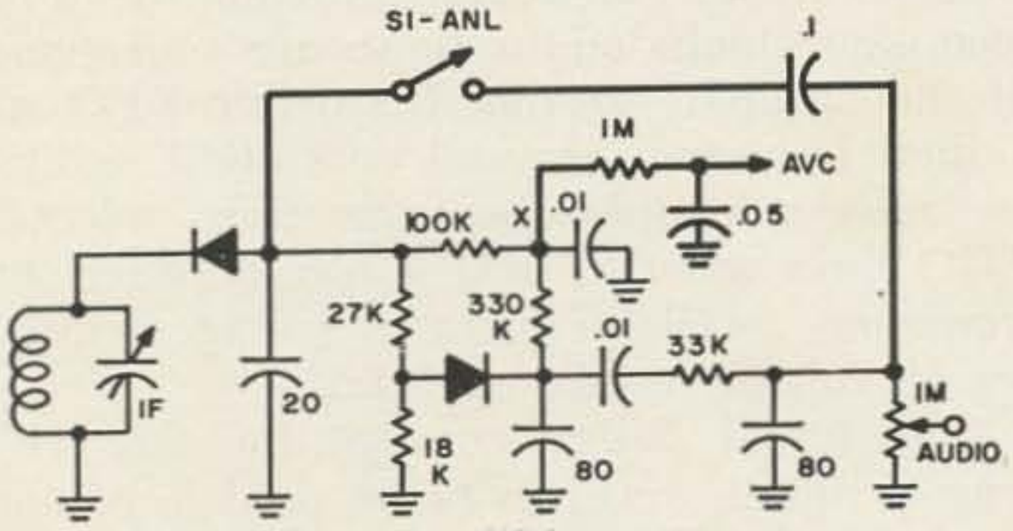

FIG. 1

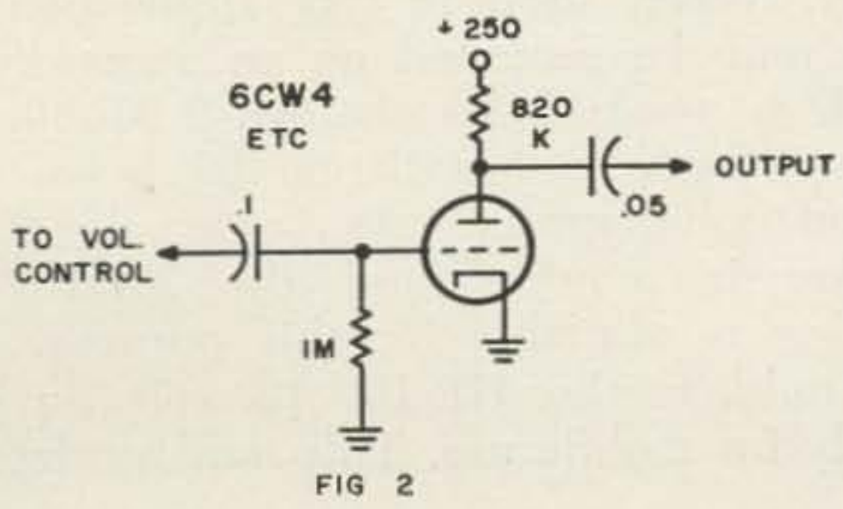

FIG 2

WHAT IS IT?

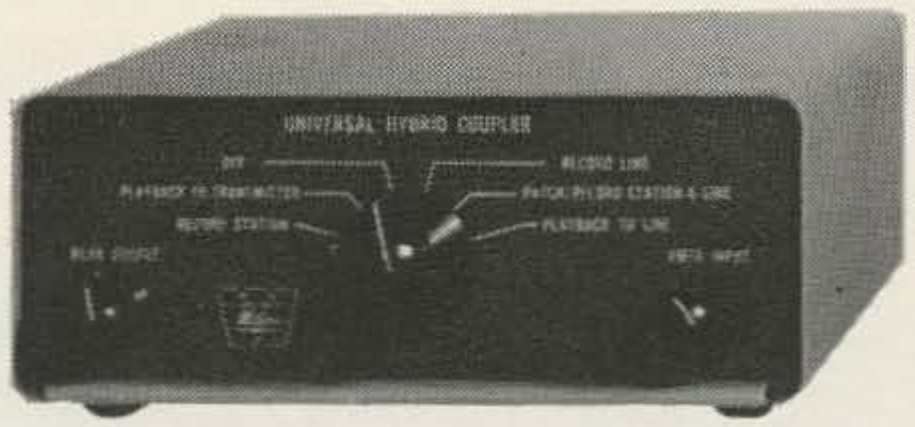

It is the Waters Universal Hybrid Coupler, one of the handiest gadgets you've ever seen for the hamshack.

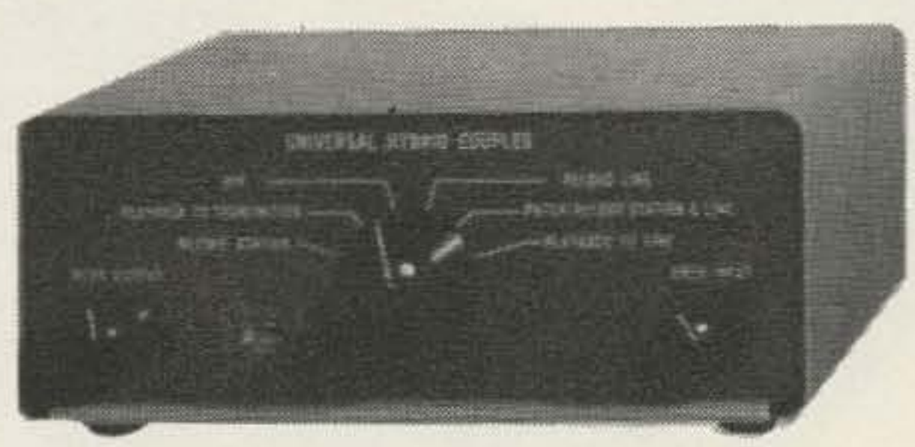

It is a Phone Patch, connecting your receiver and transmitter to the phone lines.

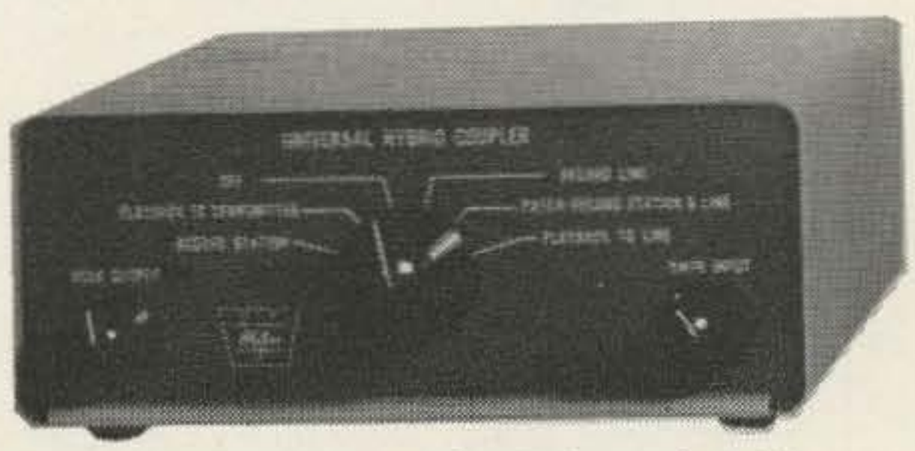

Hybrid: Works on SSB (VOX) and AM . . . or even CW!

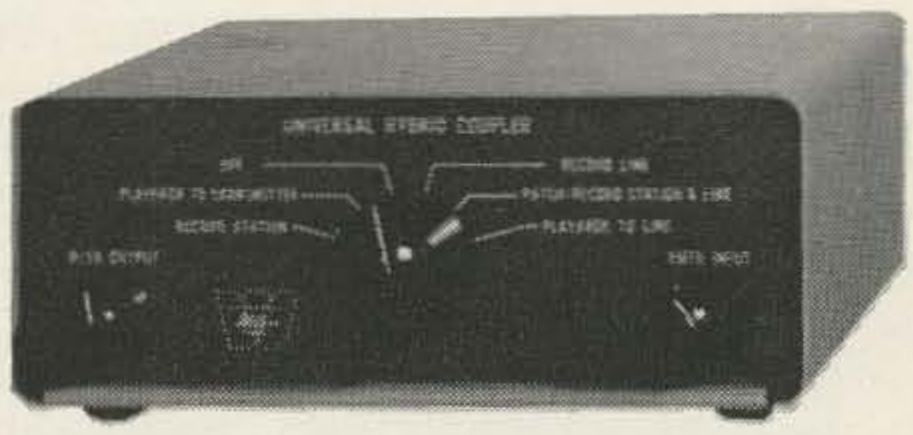

Tape record your CQ's—DX contacts—messages—etc. Tape record and play back on the phone too.

See Your Distributor . . .

UNIVERSAL HYBRID COUPLER

only **$49.50**

See page 54 in Sept. '62 73.

WATERS MFG.

WAYLAND, MASSACHUSETTS

ceiver uses a series-parallel heater string, it was necessary to change the 6U8 to a 12AX7 and connect the nuvistor in parallel with the 12AX7. Another solution would be to add a second nuvistor as an rf amplifier.

The results are amazing, as the limiter completely eliminated all ignition noise from my XK-140, which was so noisy that I gave up trying to operate 2 meter mobile from it. With very little effort, it should be possible to add this limiter to any receiver, and eliminate almost all qrn. . . . WA2INM

Roy Pafenberg W4WKM
John Bowden W4SYJ

73 Tests the Heath HR-20 Mobile Receiver

—ANOTHER MOBILE RECEIVER? Well, not exactly. While Heath calls their new HR-20 kit a mobile receiver, an SSB receiver and, at times, a mobile SSB receiver, it is more than this. The HR-20 is an advanced design amateur band receiver, less power supply, which provides, in a compact package, those receiver characteristics and features which Heath believed would provide the most performance for the money. As far as the writers are concerned, Heath has a winner.

The HR-20 Receiver is a 7 tube (plus gas regulator, Zener diode and transistor regulator) single conversion superheterodyne receiver designed for CW, SSB and AM reception in the 80 through 10 meter amateur bands. Modern design techniques and components insure excellent performance in all modes. Before we go into the circuit details, a few comments regarding the design philosophy and history of the HR-20 Receiver are in order.

As shown in the photograph, the physical configuration of the HR-20 is similar to that of the previous Heath mobile receiver, the MR-1 Commanche. Much of the circuitry, the panel layout and physical dimensions of the original model have been retained. The major changes are in new features for improved SSB reception. Included in these are replacement of the original variable frequency BFO with a dual frequency, crystal controlled oscillator for selectable sideband operation, selectable AGC time constant and a transistorized high frequency oscillator filament voltage regulator for 12 volt dc mobile operation.

The initial design concept for the HR-20 was as mobile receiver to be used in conjunction with the Heath HX-20 Mobile SSB Transmitter. When used in this application, both units may be mounted on an accessory base which is available as the AK-6 Mobile Base Mount. Such an installation is shown in the second photograph. An external, 8 ohm speaker is required and the AK-7 Mobile Speaker is available for this purpose. Heath also markets the HP-10, 12 volt dc power supply for mobile use. This transistorized, 120

Now! for discriminating amateurs who are satisfied with nothing less than *THE VERY BEST*

McCoy SINGLE SIDE BAND FILTERS

The GOLDEN GUARDIAN (48B1)

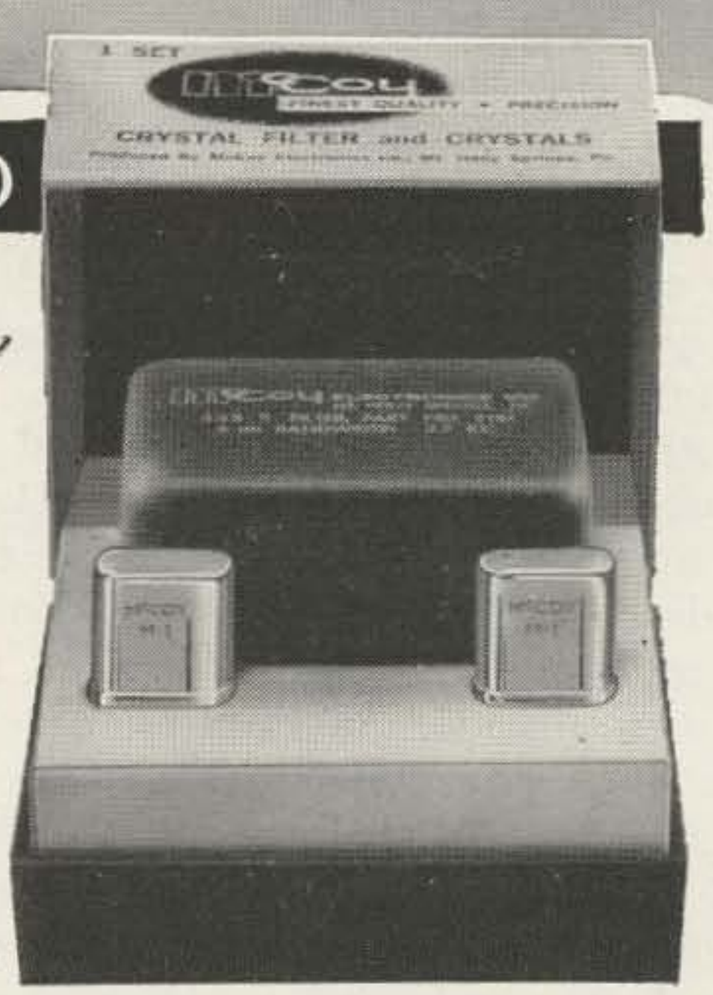

TECHNICAL DATA
Impedance: 640 Ohms in and out (unbalanced to ground)
Unwanted Side Band Rejection: Greater than 55db
Passband Ripple: ± .5db
Shape factor: 6 to 20db
1.15 to 1
Shape factor: 6 to 50db
1.44 to 1
Package Size: 2 7/16" x 1 19/32" x 1"
Price: $42.95 Each

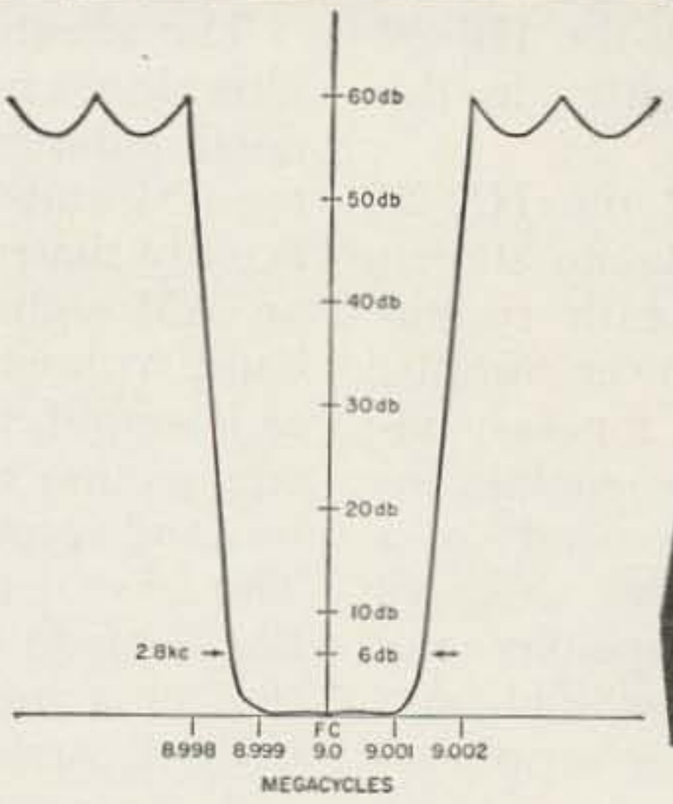

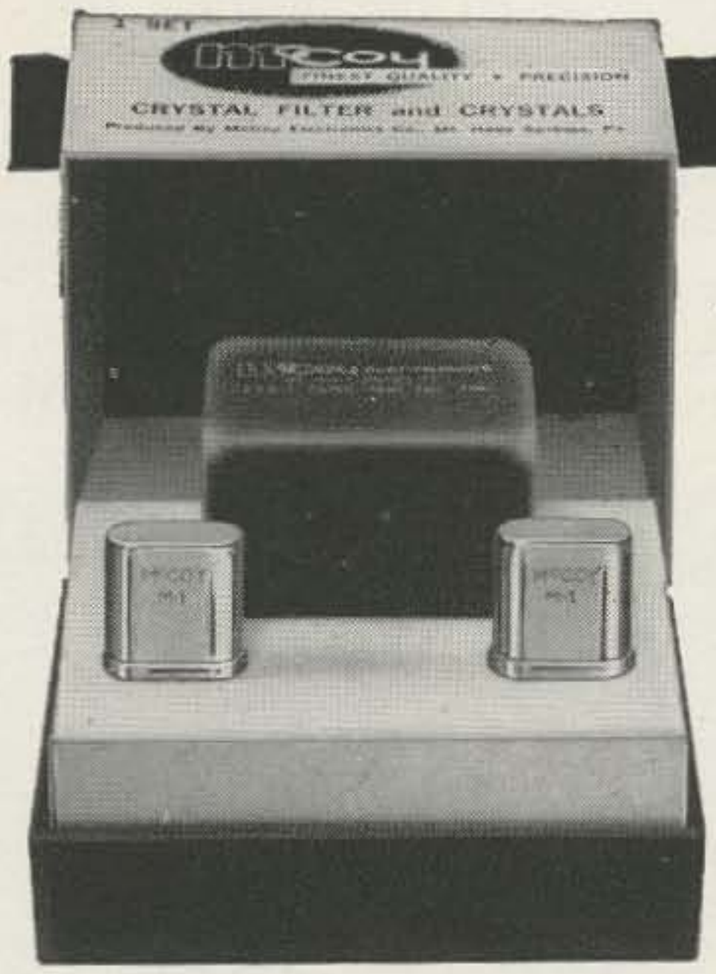

The SILVER SENTINEL (32B1)

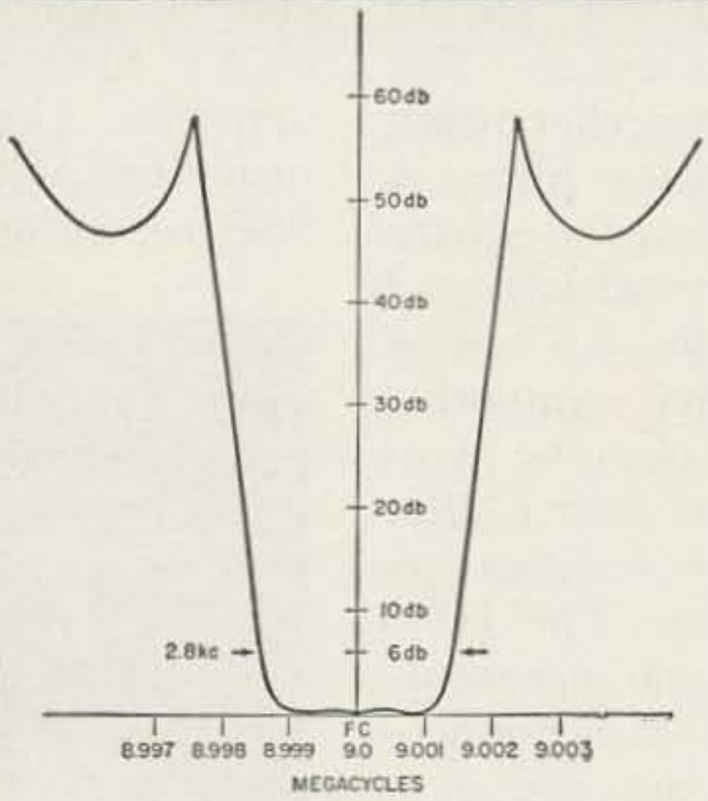

TECHNICAL DATA
Impedance: 560 Ohms in and out
Unwanted Side Band Rejection: Greater than 40db
Passband Ripple: ± .5db
Shape factor: 6 to 20db
1.21 to 1
Shape factor: 6 to 50db
1.56 to 1
Package Size: 1¾" x 1¼" x 1"
Price: $32.95 Each

Both the Golden Guardian and the Silver Sentinel contain a precision McCoy filter and two of the famous M-1 McCoy Oscillator crystals. By switching crystals either upper or lower side band operation may be selected. Balanced modulator circuit will be supplied upon request.

Both sets are available through leading distributors. To obtain the name of the distributor nearest you or for additional specific information, write:

McCoy **ELECTRONICS CO.**
Dept. 73-12
MT. HOLLY SPRINGS, PA.
Phone: HUnter 6-3411

SUBSIDIARY OF OAK MANUFACTURING CO

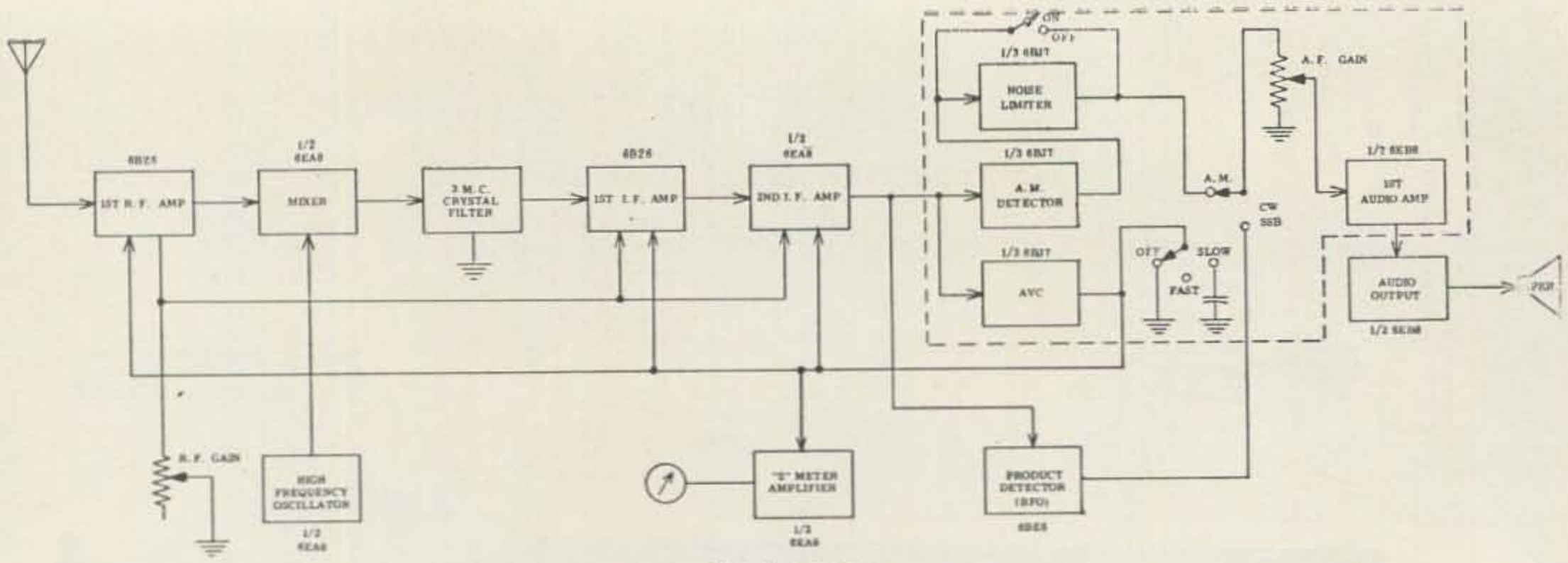

BLOCK DIAGRAM

watt unit supplies power for both the HR-20 Receiver and the HX-20 Transmitter in the normal mobile installation.

Both the HR-20 Receiver and the HX-20 Transmitter are well suited for home station use and, in this application, Heath recommends their HW-20 Utility ac Power Supply. Although the HR-20 is designed for easy integration into the home station or mobile installation, it may of course be used as a straight, ham band receiver. In this case, all that is required is an antenna, speaker and a power supply considerably less elaborate than those mentioned above. Power supply requirements for the receiver alone are shown in the specification chart.

The HR-20 circuit diagram is a bit large to include in a review article, however the block diagram shown in Fig. 1 will aid in understanding the following discussion. The receiver is a single conversion superhet using a 3.0 mc *if* with a crystal lattice filter. A 6BZ6 rf stage feeds a 6EA8 mixer-oscillator stage which in turn feeds the crystal lattice *if* filter. Use of the relatively high, 3.0 mc *if* frequency, along with the selectivity provided by the high Q rf and mixer grid circuits, gives good image rejection. The crystal lattice filter provides the *if* bandpass characteristics required for effective SSB reception. The HFO tuned circuits are individually temperature compensated to insure low drift. This coupled with rugged construction and the use of a transmitting type variable capacitor provides a high order of stability for the HFO. This capacitor is a two section unit which also tunes the mixer grid circuit. The rf input circuit is resonated by a single section capacitor designated "ANTENNA TUNING." While slightly unconventional, this arrangement allows use of the compact transmitting type capacitor for the oscillator-mixer tuned circuits and permits better physical layout of the stages.

The selectivity characteristics of the crystal filter, listed in the specifications, provide a very good compromise between the requirements for AM and SSB reception. Selectivity is sufficently sharp for effective SSB reception while an AM signal may be centered in the passband without loss of intelligibility. Two stages of *if* amplification, using a 6BZ6 and the pentode section of a 6EA8, follow the crystal filter and provide most of the receiver gain. The second *if* amplifier feeds either a conventional diode detector for normal phone operation or a product detector for CW, SSB and exalted carrier AM reception.

A conventional diode gate noise limiter, which is disabled when the product detector is used, is provided for AM reception. A separate diode AGC detector is used for gain control and to drive the triode section of a 6EA8 tube which is used as an S-Meter amplifier. The AGC circuit used in the HR-20 provides AGC operation for both AM and SSB reception. A front panel switch provides

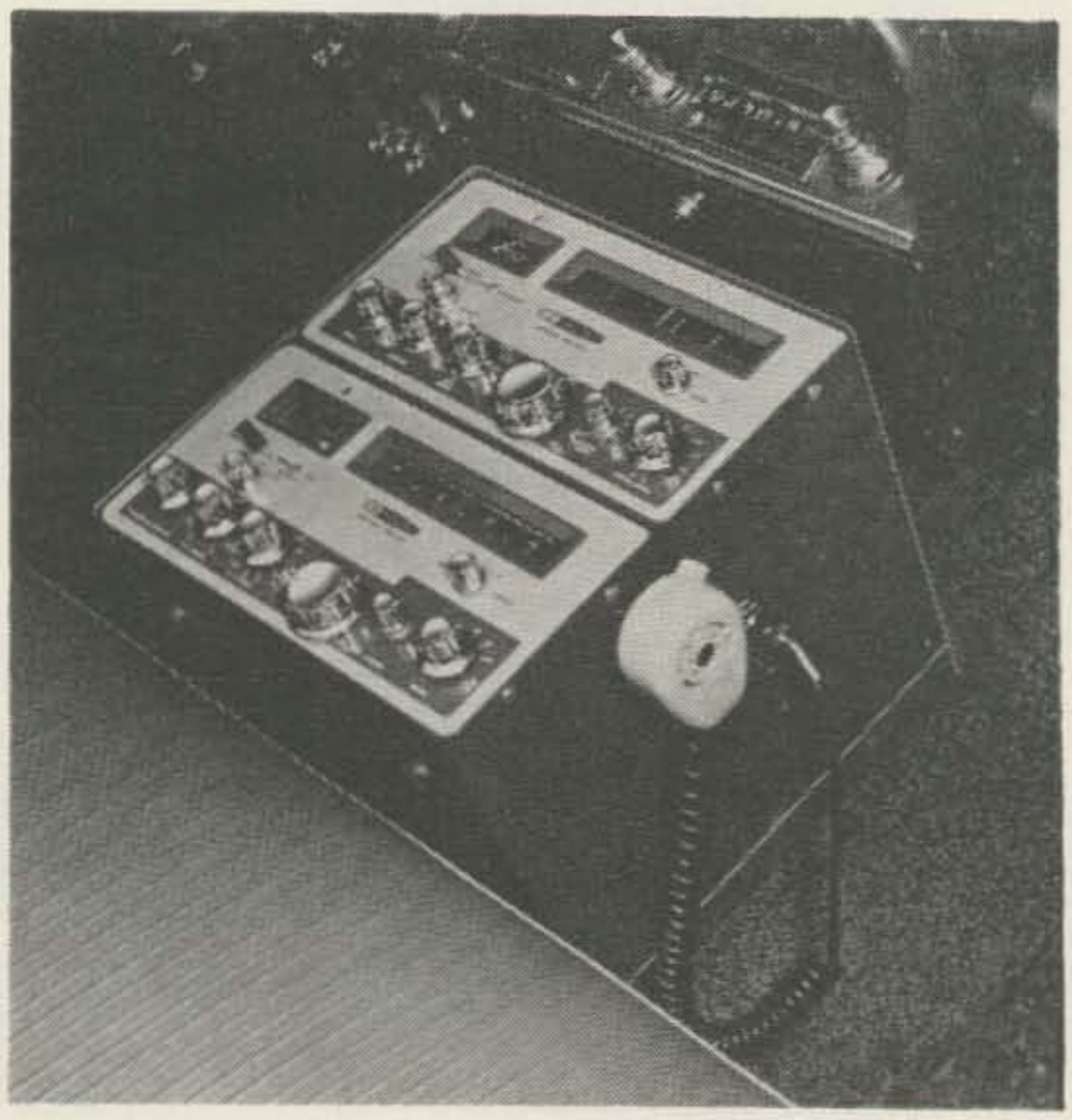

24 HOUR CLOCK

Chrome-plated 8" metal wall clock. Inner dial with south polar projection map of world indicates time around world. Polar projection dial adjustable for various time zones. Shipping weight 2 lbs.

110 V. 60 cy. $8.47

12", 24 hr. clock, 110 V. 60 cy. without world map. $13.95

(Prices include tax).

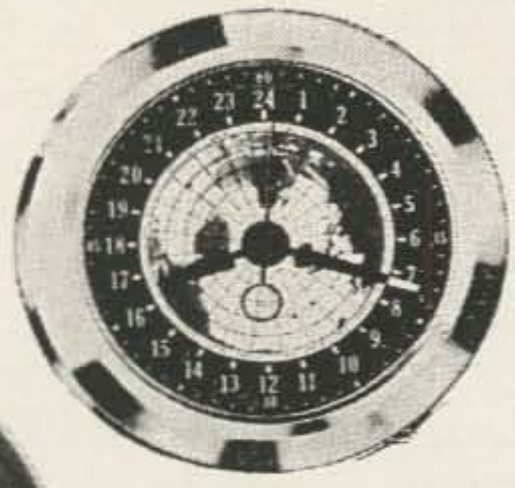

CLEGG 99'er 6 METER TRANSCEIVER

A true ham station, ideal for both fixed station and mobile operation. Double conversion superhet gives you extreme selectivity and freedom from images and cross modulation. Transmitter section has an ultra-stable crystal oscillator which also may be controlled by external VFO. Efficient, fully modulated 8 watt final works into flexible Pi network tank circuit. Large S meter serves for transmitter tune-up procedure. **Amateur net price $159.95.**

ZEUS and INTERCEPTOR also in stock.

SUPEREX HAM HEADPHONES

Full comfort even after many enjoyable hours of continuous use. Superb comfort even for eyeglass wearers. Crisp, distortionless reproduction and high sensitivity allows you to single out that weak signal and hard to reach station. 600 ohms impedance, completely adjustable head harness. **$24.95**

AMECO CB-6 CONVERTERS

Tube-type low-noise, high-gain converters. IF easily changed. Specify IF.

CB-6K — 6 meter kit, 6ES8-rf Amp., 6U8-mix./osc. **$19.95**

CB-6W — 6 meter wired and tested. **$27.50**

CB-2K — 2 meter kit, 6ES8 1st rf amp., 6U8-2nd rf amp/mix. 6J6 osc. **$23.95**

CB-2W — 2 meters wired and tested. **$33.95**

Model PS-1—Matching Power Supply — plugs directly into CB-6, CB-2 and all CN units.
PS-1K — Kit — **$10.50**
PS-1W — Wired — **$11.50**

BULLSEYE BUYS AT ARROW

hand-picked for hams by hams...

Shown approx. actual size.

PRECISION PLANETARY-VERNIER for exceptionally fine tuning

Superb craftsmanship by Jackson Bros. of England. Ball bearing drive, ¼" dia. Shaft 1⅛" long, 6:1 ratio. Vy FB for fine tuning. Easily adaptable to any shaft. Comparable value $5.95. **Amateur net $1.50 ea. 10 for $13.50**

PRECISION BALL DRIVE DIAL

Another superb product of Jackson Bros. of England. 4" dia. dial with 6:1 ball drive ratio. Fits standard ¼" shaft. For that velvet touch... **Amateur net $3.95**

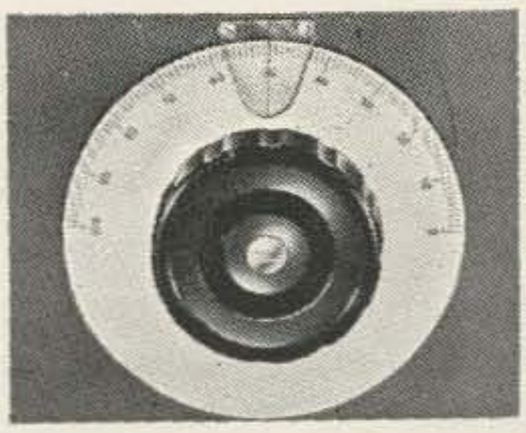

VERSATILE MINIATURE TRANSFORMER

Same as used in W2EWL SSB Rig—March, 1956 QST. Three sets of CT windings for a combination of impedances: 600 ohms, 5200 ohms, 22000 ohms. (By using center-taps the impedances are quartered). The ideal transformer for a SSB transmitter. Other uses: interstage, transistor, high impedance choke, line to grid or plate, etc. Size only 2" h. x ¾" w. x ¾" d. New and fully shielded.

Amateur net $1.39.
3 for $3.49.
10 for $10.75

Trade-ins welcomed.

SEND FOR FREE CATALOG

MAIL ORDERS PROMPTLY PROCESSED. SAME-DAY SHIPMENT FROM STOCK.

TO SAVE C.O.D. CHARGES, PLEASE INCLUDE SUFFICIENT POSTAGE WITH YOUR ORDER. ANY EXTRA MONEY WILL BE RETURNED.

ALL PRICES F.O.B. N.Y.C.
Arrow's Export Dept. Ships To All Parts Of The World!
Prices Subject To Change Without Notice.

ARROW ELECTRONICS, INC.

65 Cortlandt St., N.Y. 7, N.Y. • 212 — Digby 9-4730
525 Jericho Tpke., Mineola, N.Y. • 516 — Pioneer 6-8686
225 Main St., Norwalk, Conn. • 203 — Victor 7-5889

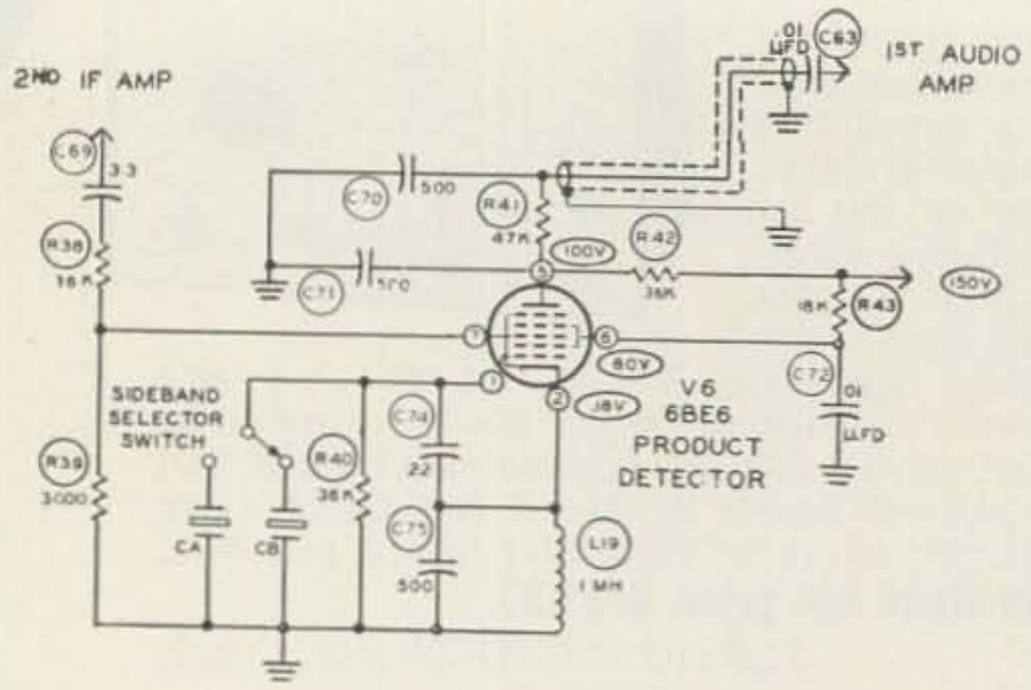

short or long time constant or disables the AGC as desired.

The product detector utilizes a 6BE6 pentagrid converter as the mixer and crystal controlled oscillator. This circuit provides very good performance with a minimum of components and should be of interest to amateurs seeking improved SSB reception with their conventional home brew or commercial receivers. Fig. 2 shows the schematic diagram of this circuit. Crystals CA, 2998.5 kc, and CB, 3001.5 kc, are positioned 1.5 kc below and above the 3.0 mc center frequency of the crystal filter. Therefore, selectable sideband reception is possible by positioning the oscillator on the upper or lower slope of the crystal filter selectivity curve. It should be noted that the "SIDEBAND SELECTOR" switch only selects the appropriate product detector crystal. It is still necessary to tune the main tuning dial to zero beat the crystal oscillator with the actual or suppressed carrier of the *if* translated, desired signal.

An OA2 gas regulator tube supplies a constant 150 volts to the plates of the two oscillators and to the screens of the rf amplifier, 1st mixer and the *if* amplifiers. The balance of the receiver circuitry is more or less conventional with the exception of the transistorized filament voltage regulator. This circuit, shown in Fig. 3, supplies a constant voltage to the heater of the 1st mixer-oscillator and rf amplifier tubes. This feature, used only in the 12 volt dc power supply wiring option, stabilizes the oscillator filament voltage and therefore contributes to the excellent frequency stability of the high frequency oscillator over the wide range of primary voltage encountered in mobile service. Regulation of the rf stage is incidental to a simple 6 or 12 volt wiring option.

This circuit should be of value to those who have been fighting the complex problem of mobile VFO stability. The parallel connected heaters of V1 and V2 are wired in series with the emitter follower transistor circuit. The base input voltage of the transistor is the breakdown voltage of the Zener diode which is relatively constant for a wide range of supply voltage. Resistor R46 provides the base drive current for the transistor and breakdown current for the Zener diode. Since the base to emitter resistance is quite low, the emitter potential is held to a value slightly lower than the base. The overall effect is that the unwanted voltage variations appear between the emitter and collector of the transistor while the voltage applied to the tube heaters is regulated.

One of the first kits off the production line was shipped for this test. The kit was well packed and, on unpacking, no damage of any kind was noted. All components were examined and found to be of excellent quality. Dipped mica and disc ceramic capacitors are used extensively. The only paper capacitor in the receiver is a high quality molded plastic cased unit. Insulation on all rotary switches is apparently one of the new plastic laminated fiberglas materials. Mechanical parts are high quality. Dial drive gears are spring loaded where required and nylon, brass and steel gears are used. All exposed steel surfaces are heavily plated.

Mechanically, the receiver is quite complex, consisting of a main chassis assembly secured to a heavy, die cast front panel. Subpanels are used to mount the various controls, gear drive for the dial and some other components. Extensive shielding is used. The result, when everything is bolted together, is an extremely rugged assembly that contributes greatly to the stability of the receiver. However, construction is not unduly complicated. The main chassis consists of a flat plate on which most components are mounted and most of the wiring completed prior to mechanical assembly of the chassis parts is accomplished. As Heath points out in the form letter packed with the kit, "This receiver is one of the more complex and compact products marketed in kit form by

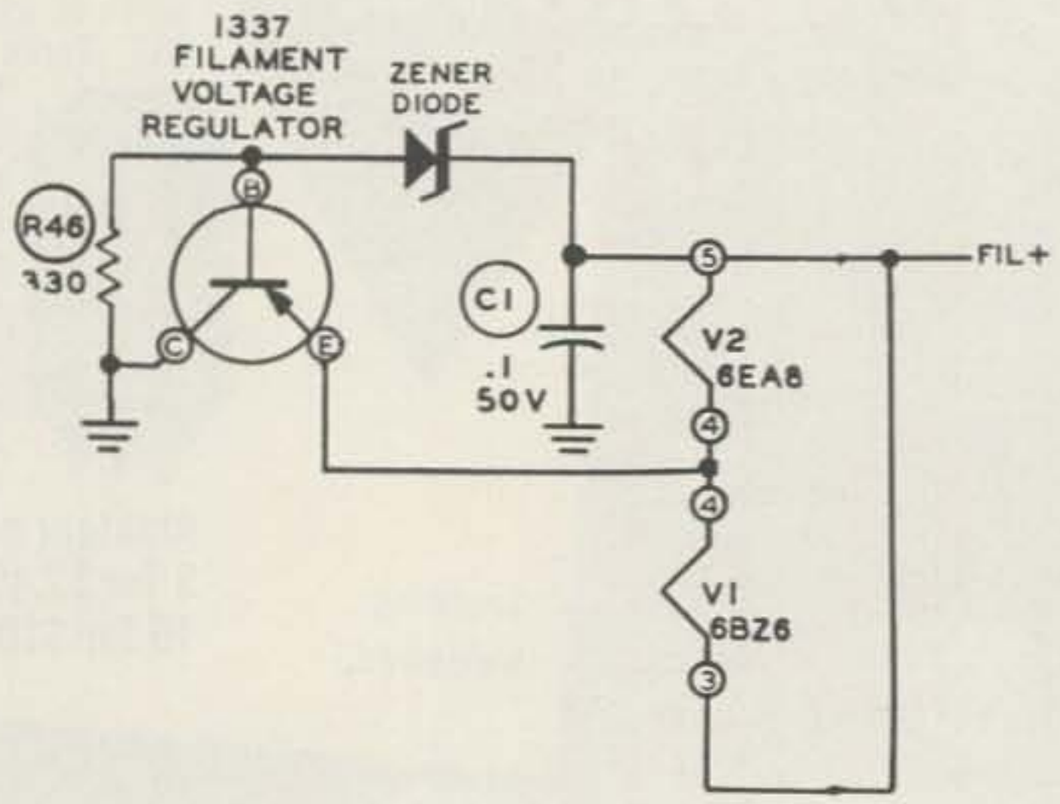

the Heath Company." Assembly, wiring and testing is not difficult but plenty of time and careful attention to detail are required.

The instruction manual supplied with the HR-20 was evaluated as the kit was constructed. This manual is quite comprehensive, consisting of 64, 8½" x 11" pages. The manual contains some 50 drawings showing the assembly, wiring and installation of the receiver. Many of the more complex assembly drawings are printed on large, fold-out sheets. In addition, a separate "giant size" schematic diagram is supplied for wall mounting. Construction, testing and installation are covered by nearly 500 "check off" steps. These instructions are arranged so as to be self checking and it would indeed be difficult to goof any part of the construction.

Three minor errors, possibly typographical, were found in the instructions. Since the errors are obvious and Heath is correcting them with an errata sheet, they will not be listed here. The pictorials were remarkably good and the only error noted was omission of a small nylon washer in the gear drive assembly. All parts are shown in drawings in the front of the manual so that even the relatively inexperienced amateur should have little difficulty in identifying the components. Separate sections of the manual are devoted to installation and noise suppression. All in all, the manual is extremely good.

Assembly, with minor exceptions, proceeded according to the instructions. The hermetic seal bushings on the bottom of the crystal filter would not quite pass through the chassis clearance holes. A pass with a file took care of this problem. The same was true of the crystal socket mounting holes. Wiring was easily accomplished. The flat, open main chassis plate makes it a snap to achieve professional results. Despite the apparent complexity of the dial drive assembly, it goes together quite easily. One "E" retaining washer required bending to make a snug fit in the shaft groove. Only one case of crowded assembly was noted. The audio output stage screen filter capacitor, a 20 mfd 350 volt unit, barely fits as shown in the instructions. This is probably accounted for by the increase in value (and physical size) over the 8 mfd capacitor shown in the pre-production schematic diagram.

The completed receiver was carefully checked before power was applied. Everything checked out so power was applied, with no smoke resulting. Alignment was started but stopped when high pitched, audio feedback was noted at certain settings of the audio

B&W

TR SWITCH

(TRANSMIT/RECEIVE SWITCH)

MODEL 381B

An electronic antenna changeover switch. Transmitter is continuously connected to antenna, antenna circuit to receiver is blocked during transmit. No switch contacts to arc or burn. Switching is instantaneous. Selectable band-switching insures no loss in receiver sensitivity. Substantial gain in receiver sensitivity results in most installations. Ideal for break-in operation on CW, SSB and AM. Bandswitch conveniently located on front. Three coax connectors are mounted on rear. Conservatively designed for full legal power. Operates from 115 volts, 60 cycles. For 52-75 ohm lines.

Size 4¾" x 4" x 5½"

BARKER & WILLIAMSON, Inc.

Radio Communication Equipment Since 1932

BRISTOL, PENNSYLVANIA • STillwell 8-5581

DOW-KEY DK60 SERIES

4 VERSATILE MODELS A.C. or D.C.

Small, Compact, Light Weight, Less than 9 oz.

COAXIAL RELAYS

Also Available with Type C, TNC, BNC, N & UHF Connectors

Outstanding favorite for amateurs . . . Versatile combinations for industrials! Low VSWR — less than 1.15:1 from 0 to 500 mc. LOW LOSSES . . . High Contact Pressures. LOW CROSS-TALK through use of patented "isolated connector" arrangement. HIGH POWER RATING. All coils encapsuled in epoxy resin for quieter operation and resistance to moisture.

★ UNCONDITIONAL GUARANTEE for one year. (We will repair if faulty within 1 year.)

★ See one of our 700 dealers and distributors in U. S. and Canada for catalog sheets or write:

★ All Relays in weatherproof boxes for exterior installation.

★ Ganged, multiple position switch arrangement available for remote control selection of antennas.

STANDARD RELAYS: DK60, DK60-G, DK60-2C and DK60-G2C —

PRICED FROM $12.45

DOW-KEY COMPANY

Thief River Falls, Minnesota

gain control. Wiring, lead dress and components were checked with no luck. Finally, the .001 mfd capacitor across the primary of the audio output transformer was replaced with a .002 mfd unit. This proved to be a permanent fix. The oscillation was probably caused by an unusual combination of extreme tolerance components. However, to avoid the possibility of this occurring in other receivers, we recommended to Heath that this change be incorporated in all kits. The balance of the alignment went smoothly with no complications of any kind. Heath proved correct in their estimate of the time required to complete the kit, roughly 30 hours from start to finish.

Then came the pay-off—the "on the air" tests. Be advised that the performance of the receiver is all that the specifications say it is. Sensitivity is extremely good, with receiver noise way down. The selectivity, as previously mentioned, is a very fine compromise between the requirements for SSB and AM reception. CW is of course another story; a valid comparison is the CW performance of the Collins 75S-1 with SSB filters. Interference on one side of the desired signal may be "dropped over the edge" of the crystal filter bandpass but you have to live with what is left on the other side. While audio gain is adequate, there is no great reserve.

Tuning SSB signals is a pleasure. The dial ratio is about the optimum compromise between SSB tuning requirements and the need to scan each amateur band in one receiver tuning range. While a dual speed drive would probably be better, the resultant complexity might prove prohibitive for kit construction. Although the gears are spring loaded, a slight roughness was noted in the tuning drive. Based on experience with previous Heath gear drives, this is expected to diminish with use. The AGC system used in the HR-20 is excellent, with very effective action being obtained on SSB signals. Use of selectable AGC time constants really pays off in SSB reception.

Frequency stability of the HR-20 is extremely good. After all, the stability requirements for mobile SSB reception are demanding to say the least. Total warm-up drift on 20 meters was 3 kc from an absolutely cold start. After warm-up, the receiver is rock stable. The receiver was heterodyned with a 10 meter signal; lifted a couple inches off the bench and dropped. The result was an instantaneous "gurgle" but the beat note did not change. Try this test with other receivers; it is quite revealing.

The frequency stability of the HR-20 is of great interest to the writers. It would appear possible to convert the HR-20 Receiver to an SSB transceiver, using a small inboard or outboard adaptor unit. The performance of the receiver circuitry that would be used in such a conversion has proved more than adequate for the job. Therefore, plans are in the mill for this conversion. If it all pans out, this will be the subject of a future article.

For a really rugged final test, the HR-20 was compared side by side with a Collins 75S-1. The 75S-1 uses a system of sideband selection where both the HFO and BFO frequencies are shifted with a single switch. This feature, coupled with the better dial ratio, made the 75S-1 easier and more convenient to operate. However, for actual performance, the Heath receiver did not suffer in comparison. Dollar for dollar, the HR-20 will be extremely difficult to beat. In the opinion of the writers, the HR-20 is the best buy on the market today.

. . . W4WKM and W4SYJ

SPECIFICATIONS

Frequency Coverage
80 Meters—3.5 to 4.0 mc
40 Meters—7.0 to 7.3 mc
20 Meters—14.0 to 14.35 mc
15 Meters—21.0 to 21.5 mc
10 Meters—28.0 to 29.7 mc
Intermediate Frequency
3 mc
IF Crystal Filter
Mid-frequency—3.0 mc
Bandwidth at —6 db—3.0 kc
Bandwidth at —60 db—10.0 kc maximum.
Sensitivity
1 microvolt or less, at 10 db signal-to-noise ratio.
Panel Controls
SB1-SB2
RF GAIN
AF GAIN, power OFF
CW/SSB-AM
NOISE LIMITER OFF-ON
AVC, OFF-FAST-SLOW
Main Tuning
BAND switch
ANT TUNING

Rear Panel Connectors
Antenna (ANT) 50-75 ohms
Power (PWR).
Speaker (SPKR) 8 ohms
Earphones (PHONES) 500 ohms
FUSE
Meter
Front panel "S" meter indicates received signal strength.
Tube Complement
6BZ6—RF amplifier.
6EA8—Mixer-oscillator.
6BZ6—First *if* amplifier.
6EA8—Second *if* amplifier and "S" meter amplifier.
6BE6—Product detector—BFO.
6BJ7—AM detector—AVC—noise limiter.
6EB8—First audio—audio output.
OA-2—Voltage regulator.
Power Requirements
Filaments: 12 v at 2.5 amp ac or dc.
6 v at 5 amp ac or dc.
B+ Voltage: 275-350 v dc at 85-125 ma
Total Power: 63.5 watts.
Cabinet Size
6⅛" high x 12⅛" wide x 9 15/16" deep.
Net Weight
16 lbs.
Shipping Weight
19 lbs.
Cost
$134.50.
Assembly Time
Approximately 30 Hours.

Letters

Dear Wayne & Virginia,

Enjoy "73" and sorry you couldn't get to the Disneyland Convention. I suppose you're going to be so busy fixing up your new location that it will be some time before you get out this way again. Remember, Virginia wants to see Disneyland. Don't work her to death feeding and making beds for the freeloaders. I'm an old Yankee and who knows, I may drive up to your place sometime with my bedroll and a slab of bacon and give you a hand. Good luck with your new location and "73".

Royal Bailey W6SEU

Editor,

Do you know of anybody using a Valiant on SSB with the SB-10 adaptor? I'm having a problem here after following the QST article, page 48, August 1960. I lost grid drive after installing switch SW4C. Perhaps some of your readers can help out.

C. J. Williams W1ROM
47 Lake Avenue
Old Orchard, Maine

Perhaps.

Dear Wayne:

Please print this in the "My face is red" column.

In reference to the Mobile Scope on page 36 of the August issue, I have received several comments such as, "It won't work." In order to make it work change the intensity and focus controls to 500K and the resistor in series with the focus pot to 1.5 meg. The power supply works better if the 25K bias resistor is changed to about 820 ohms and R2 to 130 ohms at 1 watt.

The external shell of the 913 is tied internally to pin 1 so grounding the shell shorts the power supply, leaving it ungrounded presents a shock hazard. This problem was solved here by coating the tube with several coats of Krylon and placing tape under the bracket. An alternate method would be to insert the 913 into a section of plastic tubing. If the scope is to be used in the shack use a separate filament transformer for the 913 and move the HV ground to pin 1 of the 913.

Robert L. Williams K9DYS

$15.95

New

POSTPAID!

ALL BAND VERTICAL

WRL

WVG MARK II

New low cost vertical antenna which can be tuned to any amateur band 10—80 meters by simple adjustment of feed point on matching base inductor. Efficient radiator on 10, 15, 20, 40, 75 and 80 meters. Designed to be fed with 52 ohm coaxial cable.

Conveniently used when installed on a short 1-5/8" mast driven into the ground. Simple additional grounding wire completes the installation. Roof top or tower installation. Single band operation ideal for installations of this type. Amazing efficiency for DX or local contacts. Installed in minutes and can be used as a portable antenna.

Mechanical Specifications:
Overall height — 18' Assembled (5' Knocked down) Tubing diameter — 1¼" to 7/16". Maximum Wind Unguyed Survival — 50 MPH. Matching Inductor — Air Wound Coil 3½" dia. Mounting bracket designed for 1-5/8" mast. Steel parts irridite treated to Mils Specs. Base Insulator material — Fiberglas impregnated styrene.

Electrical Specifications:
Multi-band operation — 10-80 meters. Manual tap on matching inductor. Feed point impedance — 52 ohms (unbalanced). Maximum power — 1000 watts AM or CW-2KW PEP. Omni-directional. Vertically Polarized.

WRL WORLD RADIO LABORATORIES
Council Bluffs, Iowa

☐ Check enclosed. ☐ Ship one WVG MK. II @ $15.95 Postpaid.

Name_____
Call_____
Address_____
City_____
State_____

AM Oscilloscope Patterns

Harvey Pierce WϕOPA
5372 E. Bald Eagle Blvd.
White Bear Lake 10, Minnesota

THESE ARE TYPICAL patterns as seen on the "Simplescope" (See Sept., 1961, "73 Magazine") hooked to an AM transmitter. Any other 'scope with its vertical plates connected to an rf pick-up will give envelope patterns as shown, even from a receiver *if* output. For the trapezoid figures, though, the horizontal plates must be connected direct, without amplifiers, through a dropping resistor only if needed, to the modulating voltage. Most commercial scopes do not provide for this type of connection.

A 'scope gives instantaneous reading, so the majority of these drawings represent a fleeting picture, not a steady state. They are idealized and simplified, yet the viewer should be able to recognize, from them, when a similar condition exists in his transmitter. Oscilloscope patterns change constantly as the modulating voice changes, yet over all they obey certain rules for certain conditions. Let's look at the pictures and see.

A. This is the undeflected spot. It should be small and round. "Z" is the horizontal reference line (imaginary) drawn through the spot, representing the point of zero rf output.

B. This is the unmodulated carrier of a trapezoid pattern. Length "X" represents rf output (carrier) voltage. The rf coupling to the 'scope should be adjusted so that "X" is not over 1/3 the diameter of the 'scope face.

C. If the vertical trace is wider than the spot seen as in drawing "A", there is hum or noise in the audio system or in some cases the power supply.

D. Speaking in the microphone should produce a pattern like this. (A trapezoid.) The horizontal or "Width" control (audio coupling) should be adjusted so the slanting sides of the figure are from 30 to 45 degrees to reference line "Z".

E. This is exactly 100% modulation. In a perfectly modulated transmitter, "Y" should be twice "X". (It rarely is!)

F. This is overmodulation. "Y" is now more than twice "X". "A" should be equal to "B" plus "C", but in practice it rarely is. Portion "C" is a bright horizontal line, and indicates the amount or degree of overmodulation on negative peaks of the audio cycle.

G. This is phase shift between the audio to the 'scope deflection plates and the audio doing the modulating. Any amplifier or coupling except a simple resistor between the horizontal plates and the modulating audio will cause this pattern. The "loop" changes shape with voice frequency changes.

H. Here is a picture of a slight case of what is termed "a lack of modulation capability." Note the rounded left-hand corners.

I. A severe case of "lack of modulation capability."

J. A typical pattern of lack of modulation capability. There are many causes. For plate modulation the commonest cause is lack of grid drive or (what amounts to the same thing) over-coupling to the antenna or load. Other factors may be bad or overloaded final tubes, poor power supply regulation, or an overloaded power supply. In screen, grid, or other forms of "efficiency" modulation this pattern usually means improper operating voltgages. In a few circuits nothing will help, for they are just incapable of linear modulation.

K. This is the pattern for choke or Heising modulation with the final heavily loaded and the modulator tube(s) operating class AB2 or B. Note that "Y" is a little greater than "X", and "A" is much smaller than "B" indicating essentially negative modulation.

L. The ideal pattern for negative peak clipping. "A" is greater than "B" showing extra positive modulation. Right hand point is bright and rounded showing clipping action.

M. "Envelope" pattern for unmodulated carrier. This and the rest of these pictures show patterns seen with 60-cycle ac applied to the horizontal plates instead of the modulating

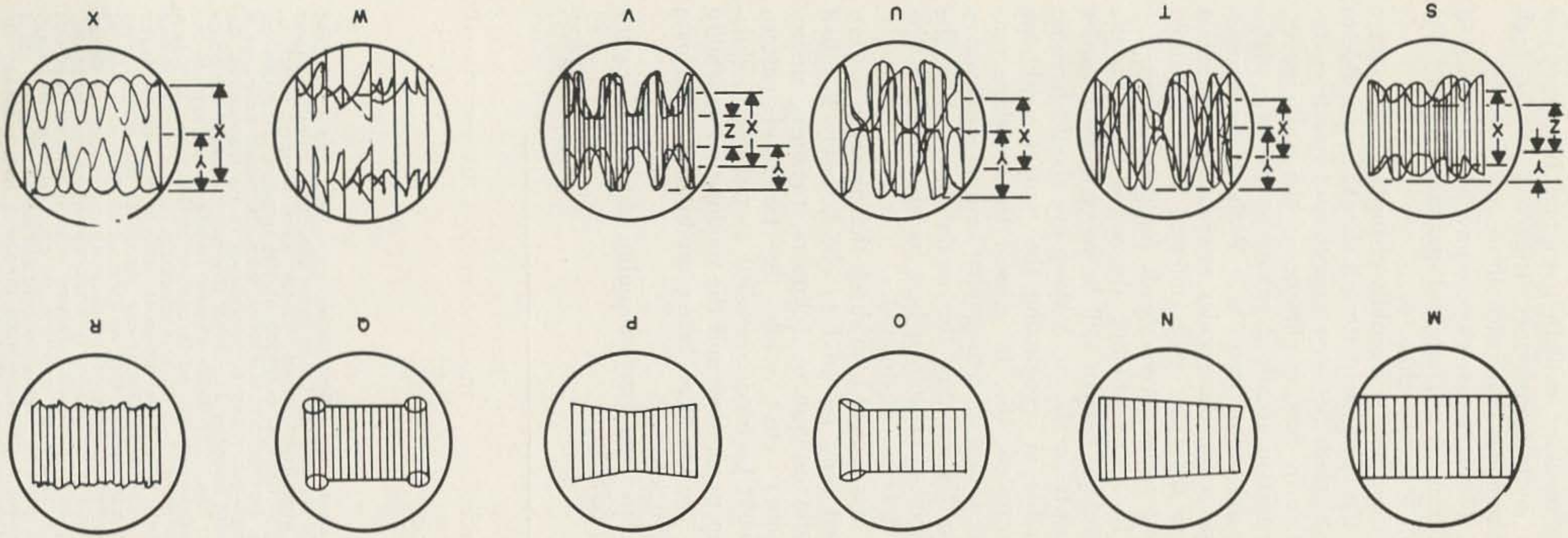
TM
X
Y
W
V
Z
U
T
S
R
Q
P
O
N
M

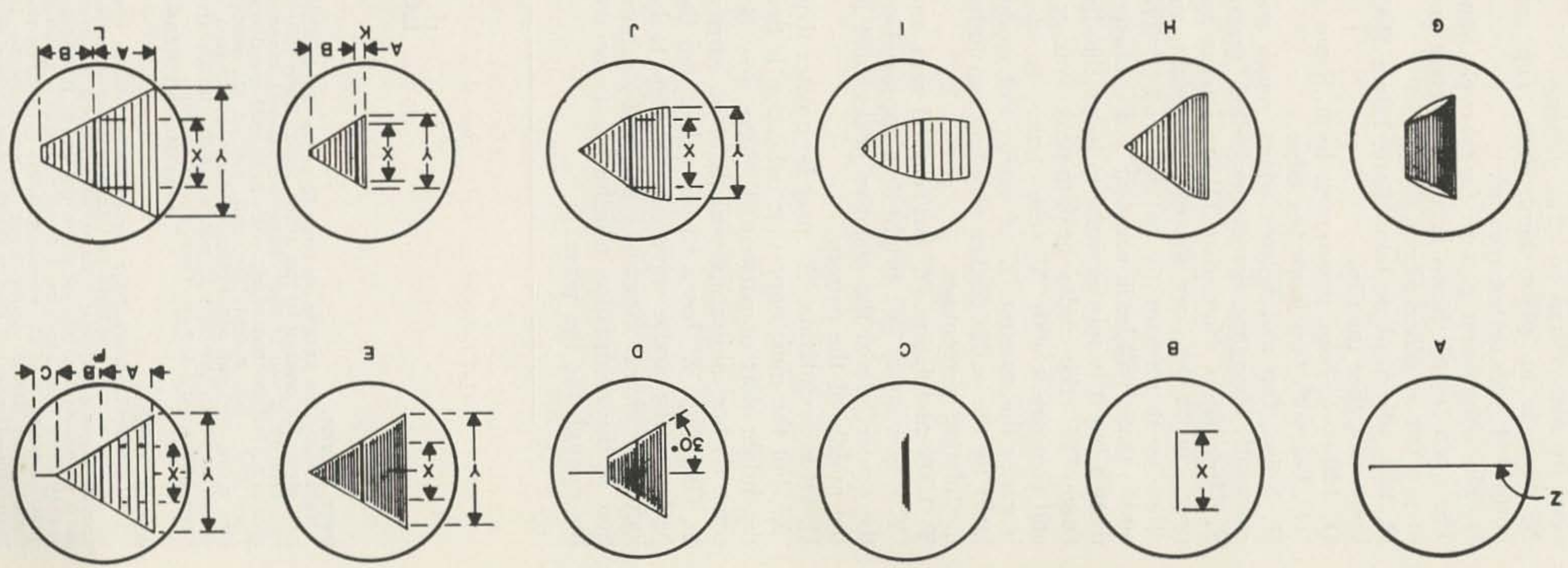
L
K
J
I
H
G
30°
F
E
D
C
B
A
Z

audio voltage. Rf coupling the same as before. Width is set so that all four corners are seen for hum analysis, but may be expanded if desired for more detail on other patterns.

N. 60-cycle in- phase hum. Rare. Top and bottom of pattern not parallel.

O. The commonest pattern for 60-cycle hum. The open "loop" shown here at the right end may occur at other places.

P. 120-cycle in-phase hum. Rare. Edges MAY bow out rather than in.

Q. 120-cycle hum, commonest form. Same as "O", but with two loops per edge.

R. Noise. Top and bottom edges, rough and constantly changing. Sometimes called "grass."

S. Modulation. Note that TWO patterns appear, one as the trace moves left-to-right, another as it reverses to go right-to-left. The audio waves will be in constant and confusing motion but it is only essential to judge the distance "Y" (the audio peak-to-peak voltage) and compare it with "X" (the carrier) or what is easier the amount "Z" of carrier not modulated by the audio. Either way you can judge modulation percentage.

T. 100% modulation. "Z" has reached zero, and "Y" is now equal "X". Bright dots appear along the center line as the negative peaks meet in the middle of the pattern.

U. Over modulation. "Y" may be greater than "X", but the most important indication is that the bright dots of pattern "T" have now become dashes, indicating periods of no carrier.

V. Clipping. "Z" has a steady value, and the peaks of the audio wave can be seen to be flattened. This is sometimes caused by saturation of the modulation transformer (core not big enough for the power).

W. High frequency "Spiking." The spikes are 2 or more times the height of the rest of the audio waves. Usually caused by "ringing" (momentary oscillation at a high frequency) in an audio transformer, triggered by the high frequencies that naturally occur in speech.

X. This is the envelope equivalent of trapezoid pattern "K". Trapezoid patterns "I" and "J" will look like this, too.

Even with the rapidly changing double trace of the envelope pattern it should be possible to distinguish between smooth and rough modulation by fleeting glimpses of the audio waves. Distortion usually shows up as excessive highs, similar to pattern "W." With a commercial-type scope the regular sawtooth sweep set at near 60-cycles with internal sync will hold most audio waves steady for good viewing.

In actual practice the wave forms in the envelope pattern will be much more complex than those shown. A sharp eye should have no trouble in recognizing the typical conditions illustrated, tho. In general the envelope pattern is best for telling what kind of audio waves you have doing the modulating, while the trapezoid pattern is best for showing how the rf is being modulated.

In a typical ham shack the envelope pattern need only be used to check newly installed audio equipment (clippers, preamps, microphones, etc.) while the trapezoid pattern should be used constantly to monitor modulation percentage and the modulation capability of the rf stage being modulated (adequate drive, etc.).

Envelope for your audio, trapezoid for your modulation.

. . . WϕOPA

Letters

Dear Wayne,

Regarding the article on page 22 of the September 1962 issue: Treasures in the Junk Yard. Auto radios run fine on 6 vac if they have permanent magnet speakers, but do **not** work with field coil speakers. They play, but sound like hell. $10 or $15 seems like a lot for old car radios. I have purchased a dozen or so in the last 15 years for 25¢ to 75¢ and have had a half dozen more given to me.

John Marlatt K7AGI

Wayne, OM,

I'm a fumbling amateur, as dumb as dumb can be. Many of my projects fail to work for want of proper knowledge. But I have inspirations as often as it rains—and a few of them **do** work. It's probability. The best skywire I ever had was a cubical quad—I made it to the measurements printed in the book. That thing could hear a gnat sneeze in Mongolia—if pointed that way; the side pickup was down 30 db. It lasted 18 months, this bamboo windcatcher—'til a November gale bent the steel that held it vertical. Later came the circle quads, shaped of aluminum tubes. These were simply polished, 'sophisticated' versions of the quad. I tried one on ten, but in my fumbling way. It never acted as a beam—too many compromises in its framework. In recent months I've seen the helix touted for amateur use. The helix shows 'handedness,' which the quad never did, so is useless if the other guy is a southpaw. Too, in this tracking jazz, a signal shows 'rotation' effects when it travels through a layer of free ions. The Oscar signal is all screwed up when it reaches our waiting wires. The only logical **efficient** antenna for adequate reception of Oscar signals is a completely impartial quad-ty-e antenna. I've scanned the literature with a microscope, but have found no mention of any attempt to adapt the quad to high-gain configurations. Wayne, am I missing something—like maybe a few buttons? Or is this an area that has been buried under the QRN of helices, etc.?

Bob Russ KϕGKI

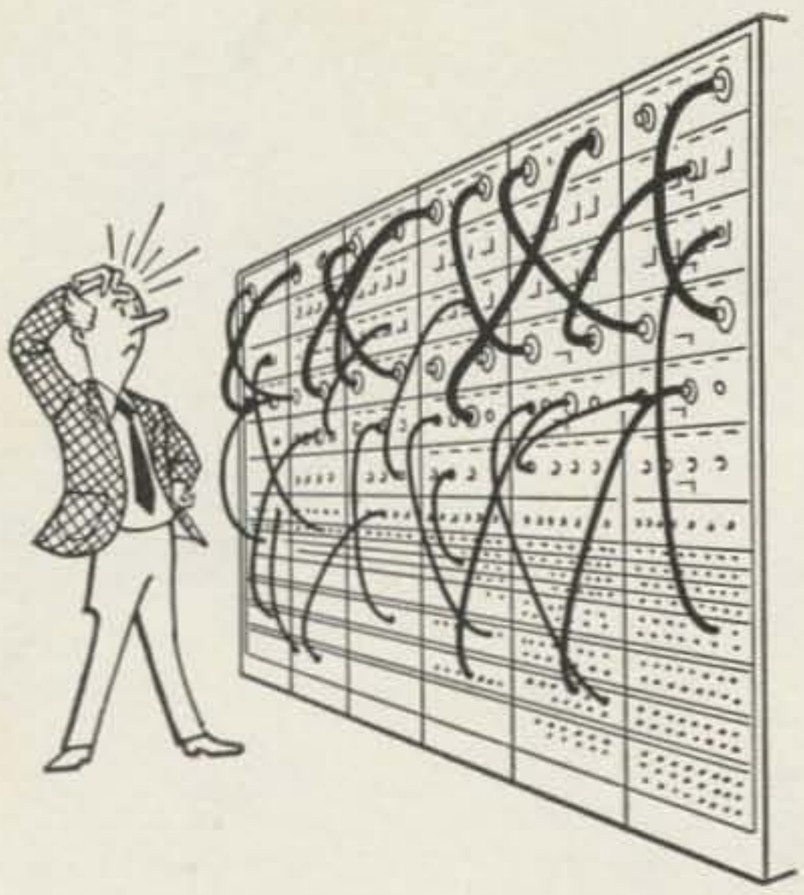

ELIMINATE RF PATCH CORDS

...by means of TMC's SPP 30-40

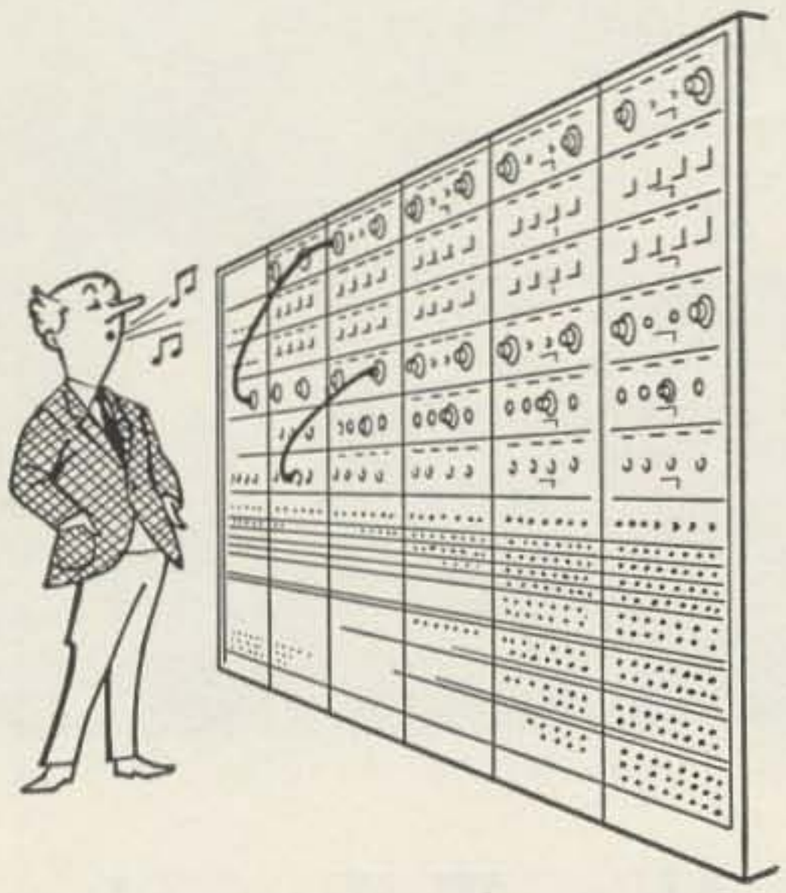

POSITIVE "NORMAL-THRU" COAXIAL SWITCH PANELS

- USE OF **R**HODIUM-**T**EFLON-**G**OLD MINIMIZES NOISE
- NEW **Q**UICK **D**ISCONNECT **M**INIATURE COAXIAL CONNECTORS PROVIDE HIGHER DENSITY — 45% MORE IN A GIVEN PANEL AREA
- ACCEPTS ALL SMALL DIAMETER CABLES

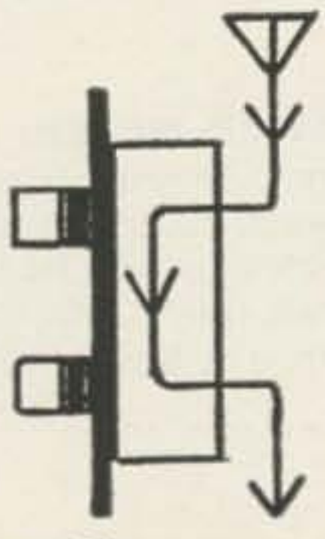

FRONT PANEL PATCHING FOR TEMPORARY RE-ROUTING OF CIRCUITS ONLY.

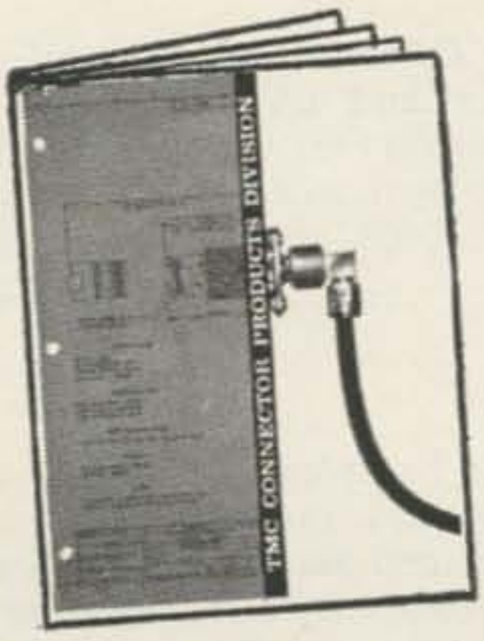

Write For Complete Catalog

• WORLD WIDE SUPPLIERS • OF ELECTRONIC COMMUNICATIONS EQUIPMENT

THE TECHNICAL MATERIEL CORPORATION

and Subsidiaries

OTTAWA, CANADA • ALEXANDRIA, VA. • GARLAND, TEXAS •
LA MESA, CALIF. • POMPANO BEACH, FLA. • LUZERN, SWITZERLAND

. . . With All the Trimmings

Wise Amateur Radio operators know that they can depend upon Heath for quality, dependability and performance at lowest cost! Savings realized through easy, do-it-yourself kit construction, make it possible for the radio amateur to equip his station with complete facilities at savings of up to 50%! You also enjoy latest engineering design and features for top performance and convenient operation. Whatever your need, whatever your interest . . . "Mobile", "Fixed", AM, CW or SSB . . . there's a Heathkit product to fill it! The handy accessories shown above are only a few of the many money-saving Heathkits available to make better contacts, more conveniently, and with added fun.

1. MONITOR SCOPE: Specially designed for Amateur use! Displays envelope, AF and RF trapezoid patterns. Ideal for checking "flat-topping" and non-linearity in SSB linear amplifiers, observing modulation characteristics of AM & SSB transmitters plus quality of received signals. Use on amateur bands 160 through 6 meters. Built-in two tone test generator. 10 lbs.

Kit HO-10...no money down, $6 mo.....**$59.95**

2. REFLECTED POWER METER: Checks efficiency of antenna system by measuring forward and reflected power or standing wave ratio. Handles a peak power of well over 1 kilowatt and may be left in the antenna system feed line at all times. Matches 50 or 75 ohm lines. Covers 160 through 6 meters. 2 lbs.

Kit HM-11.....**$15.95**

3. 100 KC CRYSTAL CALIBRATOR: Perfect for checking VFO's, receivers and other communications gear! Provides precise output every 100 kc from 100 kc to 54 mc. Circuit is transistorized and battery powered for complete portability. .005% crystal included. 1 lb.

Kit HD-20.....**$14.95**

4. RF POWER METER: Samples RF radiation near antenna to give continuous indication of relative power output of transmitter. Sensitive 200 ua meter. Requires no external source of power for operation. Covers 100 kc to 250 mc range. 2 lbs.

Kit PM-2.....**$12.95**

Easy to Build Heathkits

5. "CANTENNA" TRANSMITTER DUMMY LOAD: Permits testing or servicing transmitting equipment "off-the-air" . . . no TVI, QRM, or FCC violations to worry about! Handles up to 1 kilowatt I.C.A.S. with less than 1.5 V. S. W. R. up to 300 megacycles. Features oil-cooled resistor (oil not included). 2 lbs.

Kit HN-31 ..... **$9.95**

6. "TUNNEL DIPPER": Exclusive with Heath! . . . a solid-state grid dip oscillator. Covers 3 to 260 mc. Improved circuit extends ambient operating temperature (0° to 120°F). Color-matched coils and dial scales. Battery powered, use it anywhere! Complete with rugged, epoxy coated coils, protective cover.3 lbs.

Kit HM-10A . . . no money down, $5 mo..... **$34.95**

7. VARIABLE FREQUENCY OSCILLATOR: Provides complete coverage of amateur bands, 80 through 2 meters. Rugged, reliable and loaded with special features for top performance and stability. Use with most transmitters designed for grid-block or cathode keying. All connecting cables furnished. 12 lbs.

Kit HG-10...no money down, $5 mo..... **$34.95**

FREE CATALOG:
Send today for your free 100 page Heathkit Catalog. Over 250 different quality kits to choose from. Save up to 50% with Heathkit.

HEATHKIT® by Daystrom

HEATH COMPANY
Benton Harbor 11, Michigan

Please send Free Heathkit catalog

NAME _____

ADDRESS _____

CITY _____ ZONE _____ STATE _____

Briefcase Twins

Sidney Rexford W2TBZ
Colton, New York

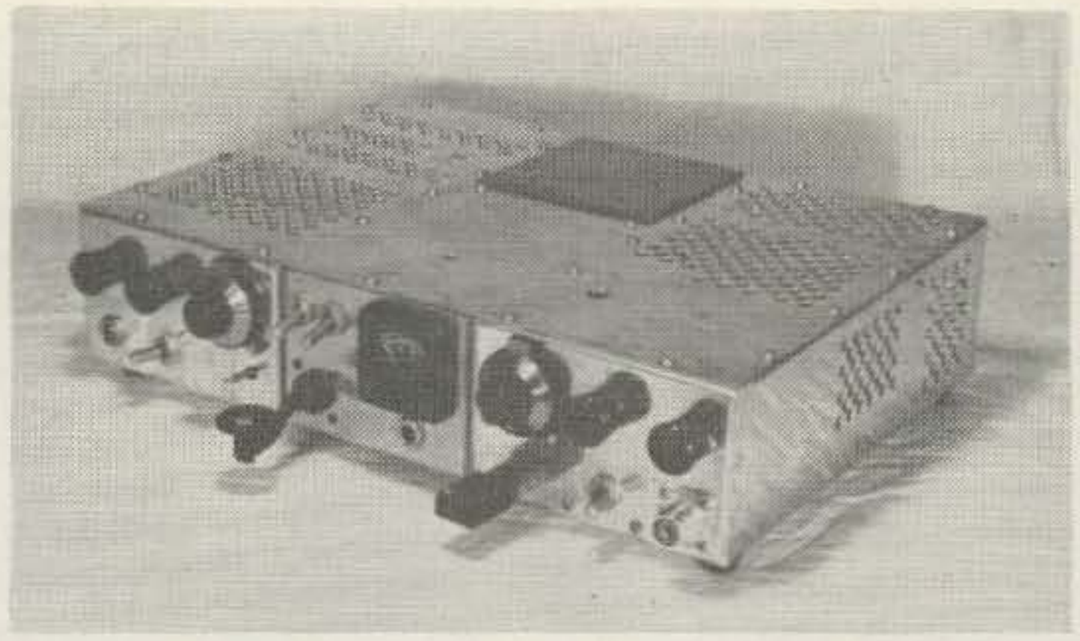

Three quarter view showing panel layout, built-in key, and ventilating holes on side and top of the chassis. The relatively symmetrical layout gave the unit its name.

WHILE I may be classified as a dyed-in-the-wool fone man, the old CW bug occasionally bites and the only solution is to work away on the nasty stuff until the spell passes and sanity returns. In the middle of an unusually mean attack it became evident that the station CW setup was as antique as high button shoes and something needed to be done about it.

The more the problem was studied the more it began to look as if a small self contained CW transmitter and receiver would be an ideal answer to the problem. If it was small enough and portable enough several other pipe dreams could be realized too.

A rather imposing "Want List" was prepared of the desirable features a small CW rig should possess. It went like this:

1. *High Portability*—To fit in a briefcase if possible. This limited dimensions of the container to about 3" x 10" x 14".

2. *Self Contained* — To include everything necessary for operation except an antenna and a 110 volt AC wall socket.

3. *Full CW Coverage* — Of the transmitter and receiver of some popular band "Open" during civilized times of the day—preferably 40 Meters.

4. *Rugged Reliability* — Must be conservatively designed and built with components operated well below critical levels to reduce maintenance and repair problems.

For those who question why the little rig was not designed around a transceiver circuit, I hasten to add that the idea was given considerable thought before being discarded. The chief argument against a transceiver circuit is the fact that retuning the receiver to duck QRM moves the transmitter frequency too and with the low transmitter power it is reasonable to assume that the guy on the other end of the QSO will have his receiver selectivity screwed up so tight that a small shift in frequency could easily put the signal outside his band pass and lose the QSO.

With the exception of the built-in key and the non-standard power transformer the parts are standard and easily obtainable. While this article isn't designed to provide the reader with much more than the impetus to take the soldering iron in hand and whomp up his own "Briefcase Twins" for his favorite band, this rig probably could be duplicated right down to and including the built-in key by some hardy souls. This built-in key came from a surplus water-tight knee bracket job with no identification other than "BRELCO NY" in raised letters on top of its water-tight box. The key mechanism was removed from the box and mounted in a ¾" hole as shown in the photos. Key adjustments are accessible through holes drilled in the bottom of the chassis.

Key to Key

The little rig provided an opportunity to try out a somewhat novel keying circuit which proved highly successful and is worthy of duplication in any future CW transmitter design.

Sequential keying is not new. There are several circuits available all of which are successful and widely used. Most of them I have tried resulted in satisfactory keying of the transmitter but failed to properly mute the receiver, provide monitor facilities, and provide

for antenna switching without an annoying clatter. What was desired was an automatic circuit that would do all of these little chores and do them the first time the key was closed, then undo them after keying was completed. This would provide clean keying characteristics and still permit a reasonable break-in capability.

The basic keying circuit is shown inside the dotted lines of Fig. 1. The mode of operation may not be apparent at first glance so a few words of explanation are in order. For the explanation assume a jumper between H and I.

With the key open −150 volts of blocking bias is applied to the final amplifier grid and the monitor oscillator. The diode connected half of the 12AX7 does not conduct because negative (or equal) voltage is applied to the plate with respect to the cathode. The .1 mfd capacitor between the cathode and ground is charged negatively above ground through the 3 Megohm resistor. This negative voltage is also applied to the grid of the second half of the 12AX7 biasing it beyond cutoff leaving the plate relay open. No bias voltage appears on the receiver tube grids and the receiver operates normally. Disabling cutoff bias is applied to the transmitter grids.

When the key is closed cutoff bias is removed from the monitor oscillator and normal operating bias of −15 Volts is applied to the

Fig. 1

NOTE: The voltages measured at the circled points will depend upon the transformer used. The table values given are approximate, and measured from point to chassis.

Voltage Point	Voltage Key Up	Voltage Key Down
A	6.3vac	6.3vac
B	+400v	+400v
C	+400v	+390v
D	−150v	0
E	−150v	0
F	−150v	−15v
G	−150v	0
H	+400v	+300v
I	+400v	+390v
W	0	−150v
X	−150v	0
Y	+400v	+390v
Z	6.3vac	6.3vac

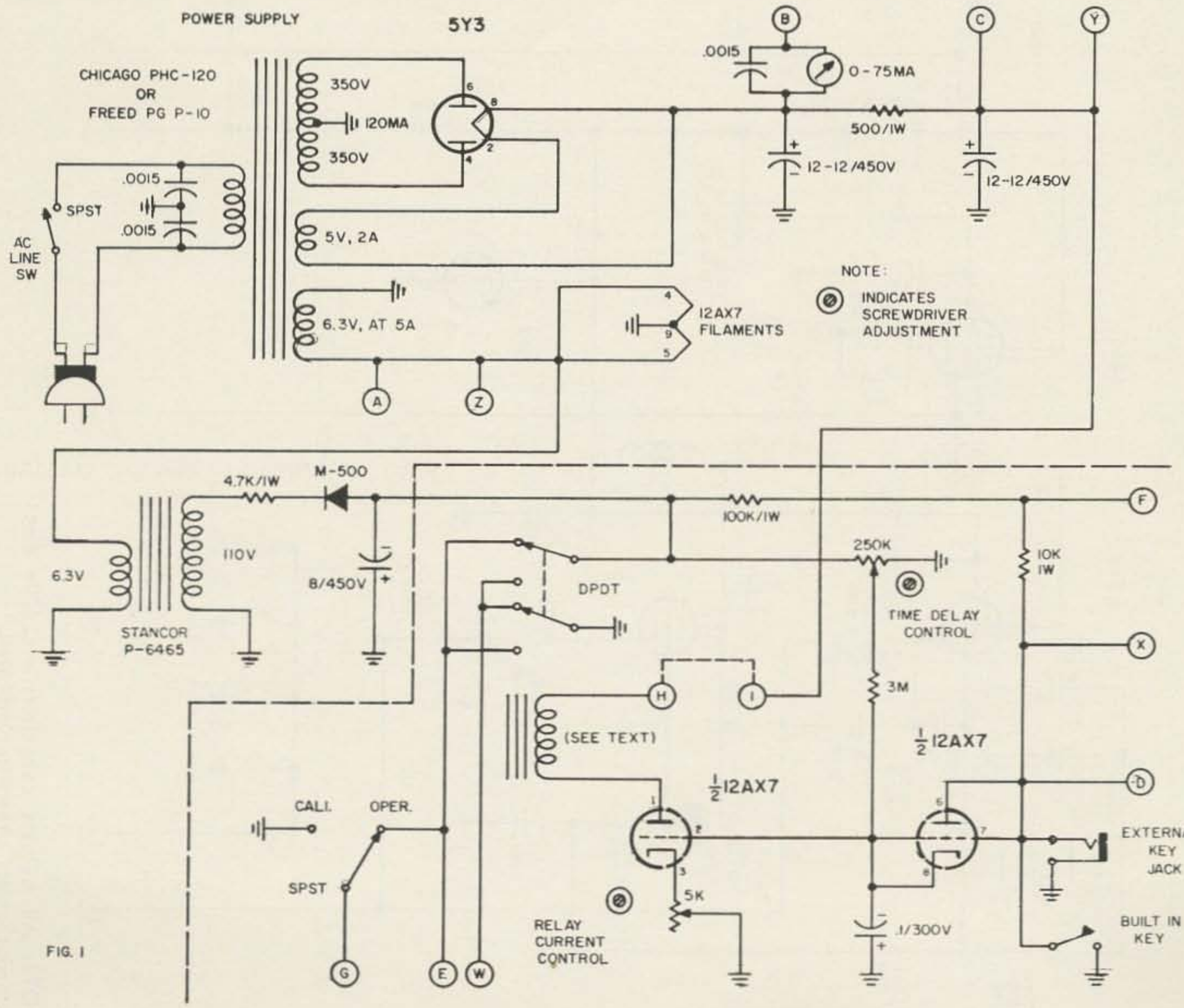

FIG. 1

KEYER CIRCUIT

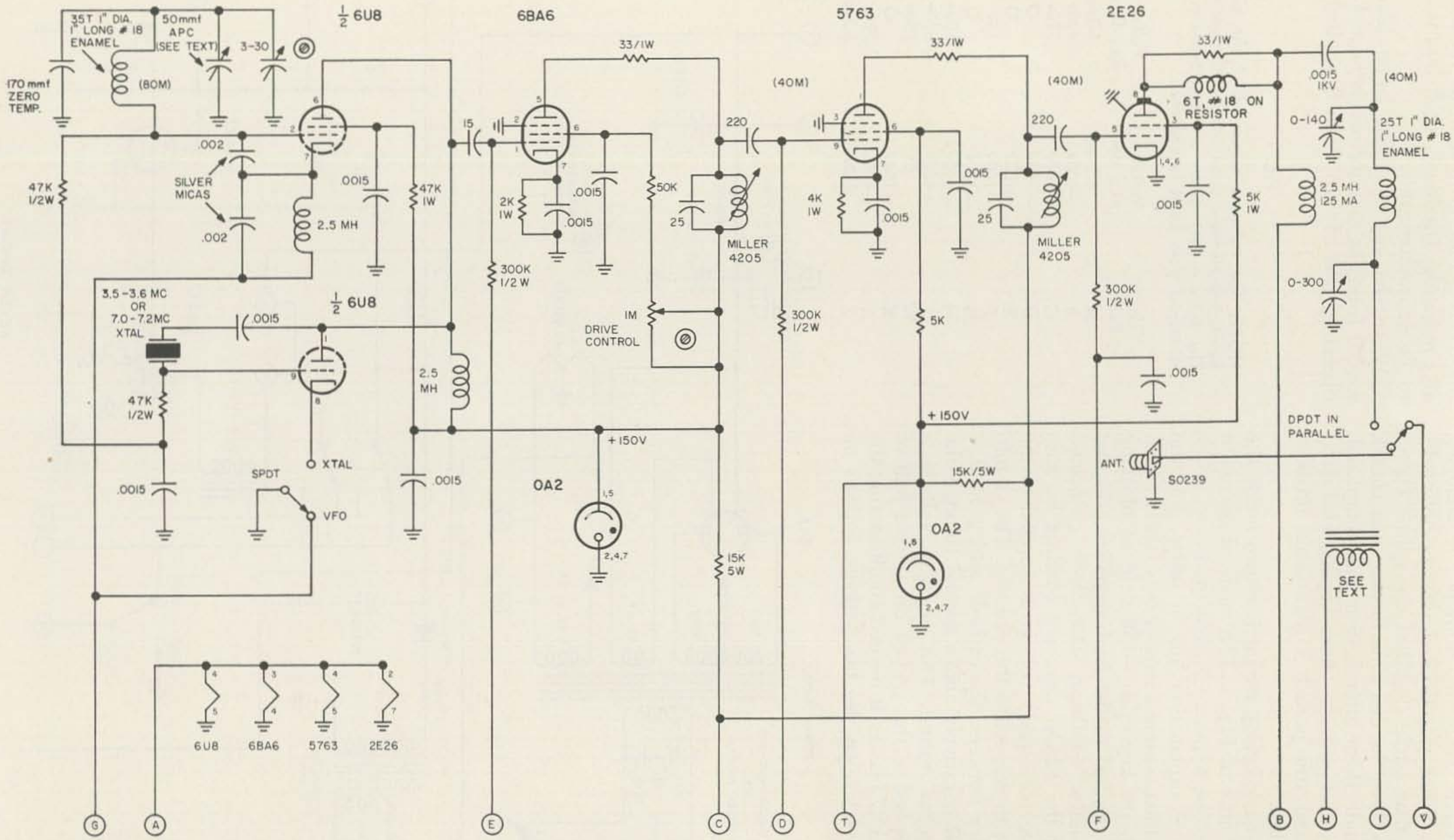

NOTE: All by-pass capacitors are 600v disc ceramics unless otherwise indicated.

NEW FROM PEL
GRID DIP METER

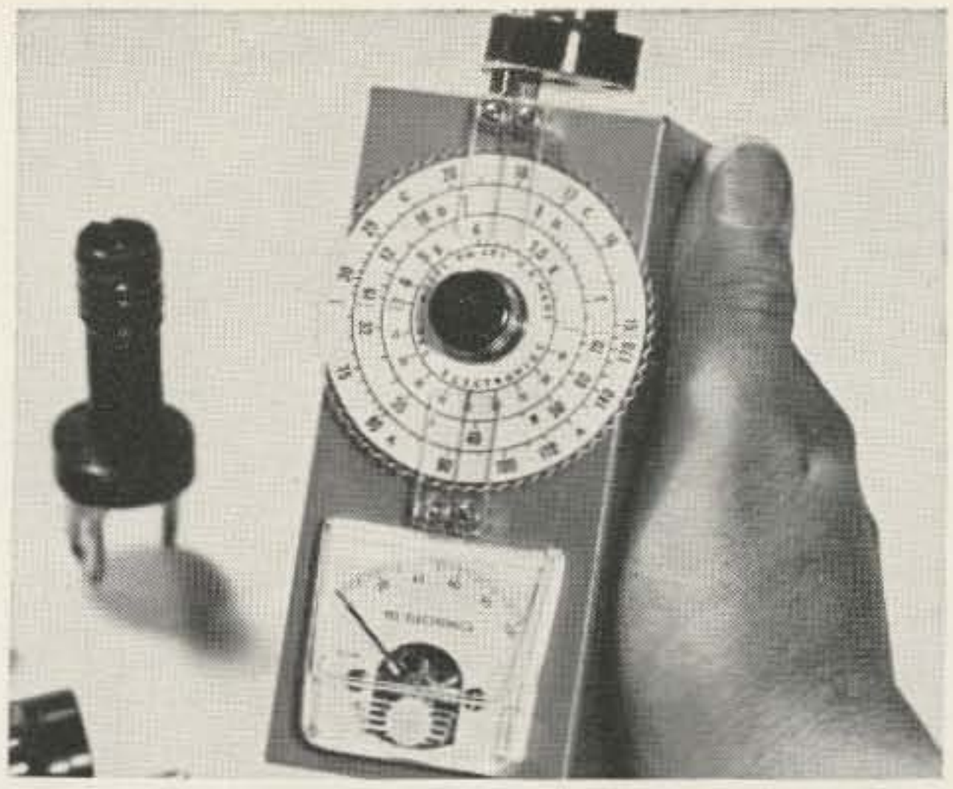

PEL ELIMINATES THE ~~GRID~~

AND FREES YOU FROM POWER LINES

TRANSISTORIZED • BATTERY POWERED • CONVENIENT ONE HAND OPERATION • WEIGHS ONLY 14 OZ. • LETTER KEYED COILS AND SCALES • FREQUENCY RANGE 3.5 TO 230 MC. • EPOXY COATED COILS WITH RELIABLE BANANA PLUGS.

KIT $29.90 • ASSEMBLED $39.90

SEND FOR TECHNICAL BULLETIN

Another Exclusive Item — TRANSISTORIZED SIGNAL GENERATOR • 135 KC. TO 120 MC. • CB XTAL SOCKET ON FRONT PANEL.

KIT $34.90 • ASSEMBLED $54.90

At Better Dealers

PEL ELECTRONICS

214 MAIN ST. • HACKENSACK, N.J.

final amplifier grid. The plate of the diode connected half of the 12AX7 appears positive with respect to the cathode; the tube conducts and quickly discharges the .1 mfd capacitor. This removes the cutoff bias from the grid of the relay tube half of the 12AX7. Plate current flows and the relay closes. When this DPDT relay closes cutoff bias is removed from the transmitter oscillator, permitting it to operate. At the same time cutoff bias is applied to the receiver tube grids muting all but the af portion of the receiver.

During normal keying speeds the .1 mfd capacitor is discharged each time the key is closed. The time constant of charge of this capacitor through the 3 megohm resistor is relatively slow and cutoff bias for the relay half of the 12AX7 does not have time to develop between characters. When normal keying ceases, and after a short delay, the .1 mfd capacitor will charge sufficiently to cut off the plate current, the relay to open and the cycle is completed.

Since it is also desirable to change the antenna from the transmitter to the receiver whenever the receiver is in operation a second relay for this purpose has been located near the antenna connection in the transmitter chassis. Two electrically identical relays are placed in series to perform both of the required functions. It was found that one relay opened a fraction of a second earlier than the other. The relay that opened first was chosen for the antenna change-over relay. This prevented an additional snap in the receiver by connecting the antenna before bias was removed from the receiver grids. This relay was not designed to handle rf but with this frequency and power level it works well and no future trouble with it is anticipated. Any relays capable of operating on 15 ma or less will do the job. The relays used closed on about 9 ma of plate current even though they were marked 5600 ohms and 110 Volts dc operating voltage.

The driver, final amplifier and keying monitor oscillator, being divorced from the relay all key in a normal blocked grid manner. Stations worked report the keying to be completely free of clicks, tails, chirps or other keying ills at any speed. With a bug plugged into the external key jack, and the weights off keying is still faultless. The first dot from the wide open bug is enough to set the whole keying circuit in operation and put rf into the antenna. This is better performance than was expected.

RECEIVER

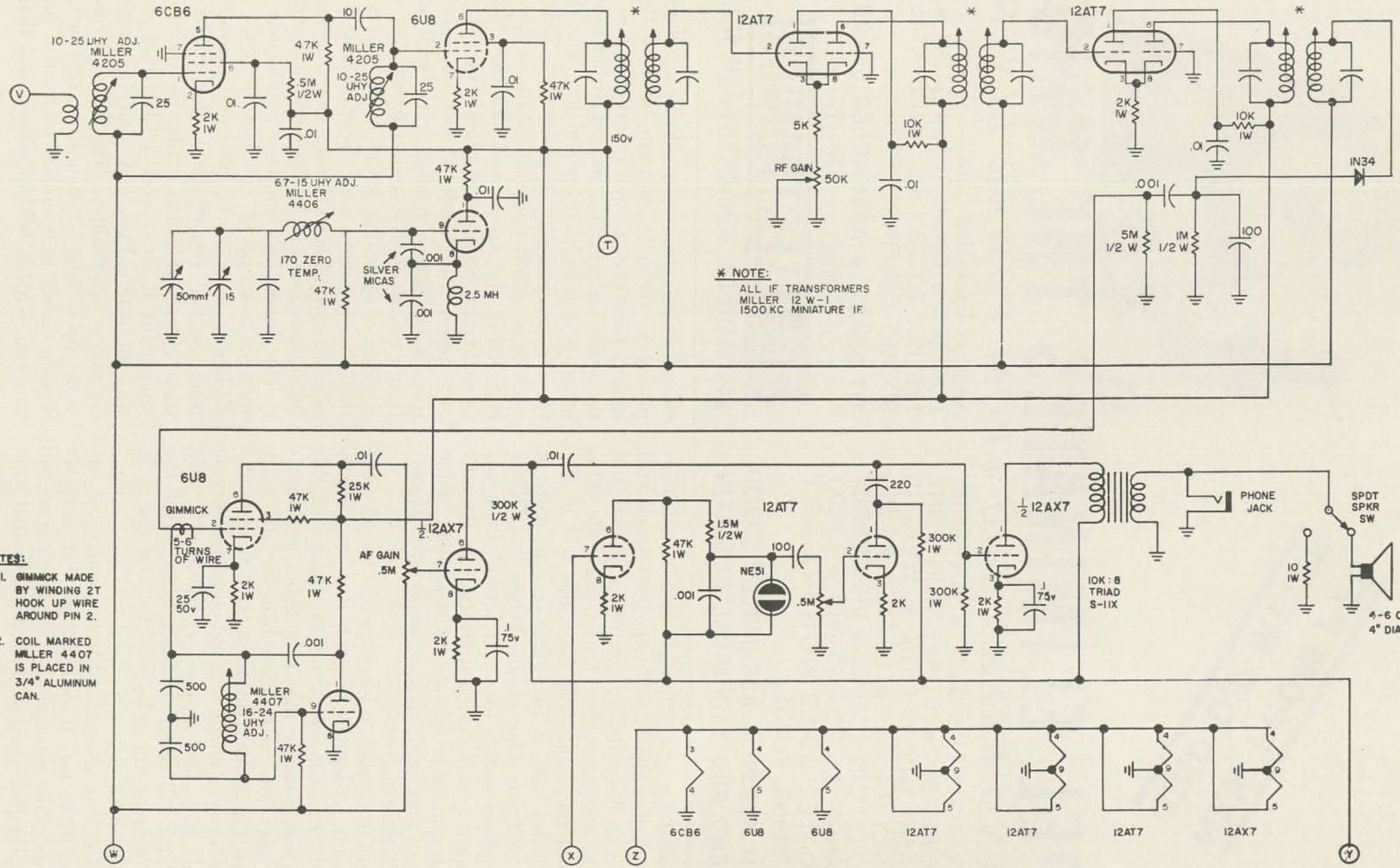

NOTES:

1. GIMMICK MADE BY WINDING 2T HOOK UP WIRE AROUND PIN 2.
2. COIL MARKED MILLER 4407 IS PLACED IN 3/4" ALUMINUM CAN.

FIG 3

EXCLUSIVE

SAVINGS ON NEW SEMICONDUCTORS ! !

ZENER DIODES

¾ watt 20% 4.3piv	$1.15
¾ watt 20% 6.2piv	1.15
¾ watt 20% 8.5piv	1.15
¾ watt 20% 15. piv	1.15
¾ watt 20% 22. piv	1.15
1 watt 20% 4.3v	1.35
1 watt 20% 6.2v	1.35
1 watt 20% 8.5v	1.35
1 watt 20% 15. v	1.35
1 watt 20% 22. v	1.35
Double anode 6.3v ±20%	.50

TRANSISTORS

Similar CK721, CK722, CK786	2 for 60¢
PNP repl'm't 4-trans radio	2.10
PNP repl'm't 5-trans radio	2.45
PNP repl'm't 6-trans radio	2.75

DIODES

	10 for
German'm replaces 1N34A	$0.98
Similar 1N137, 1N137A, 1N138, etc.	1.20
Gen. purp, glass silicon	.98
R-f gen. purp replaces 1N82A ..	.98

RECTIFIERS

100ma 1000piv hi-V silicon	$1.70
100ma 1500piv hi-V silicon	2.25
100ma 2000piv hi-V silicon	2.95
100ma 3000piv hi-V silicon	4.45
500ma 200piv epoxy, sim. 1N2069	.30
500ma 400piv epoxy, sim. 1N2070	.40
500ma 600piv epoxy, sim. 1N2071	.70
750ma 50piv replaces 1N599	.11
750ma 100piv replaces 1N600	.20
750ma 200piv replaces 1N602	.33
750ma 300piv replaces 1N603	.39
750ma 400piv replaces 1N604	.48
750ma 500piv replaces 1N605	.60
750ma 600piv replaces 1N606	.75
750ma 700piv —	.95
750ma 800piv —	1.25
750ma 900piv —	1.50
750ma 1000piv —	1.95
750ma 1500piv —	3.25
750ma 2000piv —	4.15
2amp 50piv replaces 1N2026	.17
2amp 100piv replaces 1N347	.30
2amp 200piv replaces 1N2027	.45
2amp 400piv replaces 1N2029	.90
2amp 600piv replaces 1N2031	1.35
2amp 800piv replaces 1N1236	1.75
2amp 1000piv replaces 1N3366	2.90
2amp 1500piv replaces 1N3371	4.70
2amp 2000piv —	6.50
2amp Cont. Rect. similar 2N1600	3.50

RECTIFIERS

2amp 50piv axial lead	$0.15
2amp 100piv axial lead	.27
2amp 200piv axial lead	.40
2amp 400piv axial lead	.85
2amp 600piv axial lead	1.20
2amp 800piv axial lead	1.60
2amp 1000piv axial lead	2.80
2amp 1500piv axial lead	4.30
2amp 2000piv axial lead	6.00
12amp 50piv replaces 1N1199	.75
12amp 100piv replaces 1N1200	1.20
12amp 200piv replaces 1N1202	1.75
12amp 400piv replaces 1N1204	2.60
12amp 600piv replaces 1N1206	3.75
12amp 800piv —	6.90
12amp 1000piv —	9.50
20amp to 400 piv. Cont. Rect.	14.00
25amp 50piv replaces 1N248A	1.50
25amp 100piv replaces 1N249A	2.50
25amp 200piv replaces 1N250A	3.70
25amp 400piv replaces 1N2136A	4.75
25amp 600piv replaces 1N2138A	7.75
25amp 800piv —	10.00
50amp 25piv —	2.70
50amp 50piv similar 1N411B	3.98
50amp 100piv similar 1N412B	5.98
50amp 200piv similar 1N413B	6.50
50amp 400piv —	9.75
50amp 600piv —	16.00

NOTE: All semiconductors listed above are NEW-CLEAN! Fully guaranteed. Subject to your approval. AMERICAN MADE and individually tested to meet above ratings.

SEND FOR FREE CATALOG

Order Direct
Shipped Prepaid

ALCO ELECTRONICS 21 SO. BROADWAY LAWRENCE, MASS.

Power Supply

The Twins are built in two standard 3″ x 5″ x 10″ chassis joined together in the center by the power supply and keyer chassis which is 4″ x 5″ x 6″ with an outboard power transformer projecting out the rear which extends its overall length to about 10″. The front end of the chassis becomes the panel and contains the ac switch, the transmitter calibrating switch, the 0-75 ma plate meter, the built-in key and the external key jack. The circuit diagram is shown in Fig. 1.

The power supply chassis was constructed first and was by far the most difficult of the three to wire. To anyone considering construction of such a piece of gear I recommend shopping around for physically small components. Being a natural born cheap-skate I used what was in the junk box as long as it could be fitted in without resorting to too big a hammer.

As much wiring as possible was made before the chassis began to get too full. Leads to what were to become inaccessible points when subchassis and brackets were installed later were brought out and carefully tagged. It is a good idea to prepare a step by step construction guide, Heathkit style, by mentally wiring the unit several times before final construction is undertaken. Brackets containing the filter capacitors, the keyer tube and its relay, and the rectifier tube were prewired and inserted in that order. Each wiring step was carefully checked for accuracy before progressing on to the next.

It is a good idea to take stock of the interconnections going from the transmitter to the receiver chassis which must pass through the power supply chassis but not stop along the way. The chore of trying to fish them through later can be most exasperating.

The 5000 ohm variable resistor in the cathode relay tube half of the 12AX7 provides for adjustment of maximum relay current. It is adjusted by holding the key down and reducing its resistance until both relays close. The 250,000 ohm potentiometer provides for adjustment of the time delay length. If maximum available delay is not sufficient for your taste the 3 megohm resistor may be increased to 4 or 5 megohms.

The power transformer used was a surplus Hallicrafters 52 C 243 made by the Chicago Transformer Company. The transformer has two 110 volt primary windings, one of which was pressed into service to provide the –150

volt bias source. Fig. 1, however, shows a back - to - back filament transformer for this purpose. This is to preclude frustration of builders who cannot locate an exact duplicate of the transformer I used. Those who run into space problems may relieve the congestion by substituting silicon diodes for the 5Y3 rectifier tube.

In the construction of the power supply chassis three ½", #6-32 bolts were installed on each side to fit matching holes in the receiver and transmitter chassis and provide for future alignment. These bolts later become inaccessible in both the receiver and transmitter so no effort was made to bolt the complete unit together.

Transmitter

The transmitter was the second chassis constructed and wired. The circuit, shown in Fig. 2, could have been made much simpler and with fewer stages but I doubt if it would have worked nearly as satisfactorily. About three volts of signal is provided by the vfo while a forty meter crystal provides in excess of twenty volts. The high values of grid resistors in the 6BA6 and succeeding stages provide limiting action and uniform drive to the grid of the 2E26 final amplifier. This keeps operation in the class AB_2 region throughout the entire band and regardless of the amount of drive provided by the vfo or crystal used. Class AB_2 is only slightly less efficient than class C operation and results in an exceptionally clean signal. No hint of TVI can be found.

The front panel controls of the transmitter consists of a tiny Japanese import vernier for the vfo, a crystal socket, a switch to choose between the crystal and the vfo, final tuning, antenna loading and an SO-239 coax connector for the antenna.

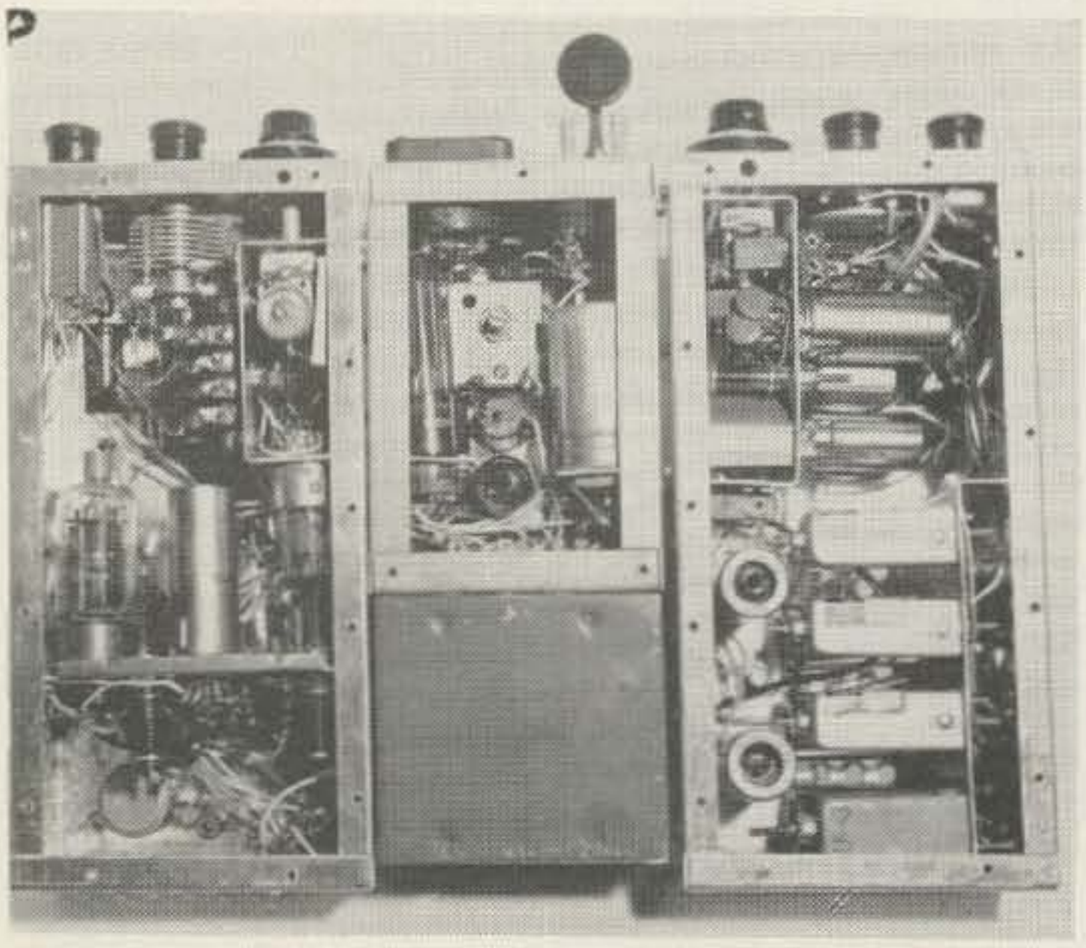

Internal view showing placement of parts and general location and size of brackets and subchassis.

The complete layout of tubes, voltage dropping resistors and other heat producing components was determined and ventilating holes drilled in the bottom, rear and right side of the chassis. Areas for the ventilating holes were squared off in ½" squares and ¼" holes were drilled in each corner and the center of each square. *Don't be skimpy on the ventilating holes!* The bull work necessary to drill a couple of hundred of them will really pay off in stability later on. You lazy guys might try using squares of "Reynold's Do-It-Yourself" perforated aluminum sheet bolted in place. It's a little thin for the job but presents an easy out.

The oscillator sub-chassis was installed and tested first. Coverage of the vfo was adjusted by removing plates of the 50 mmfd APC tuning capacitor until 3.5 mc to 3.6 mc covered approximately an area between 1 and 9 on the vfo vernier dial. After doubling in succeeding stages of the transmitter this permits coverage of the 40 Meter CW band from 7.0 mc to 7.2 mc.

The second subchassis constructed, prewired and inserted contained the rest of the transmitter tubes and the rf choke for the final amplifier plate circuit. Considerable thought must be given the layout of this chassis with particular attention to being able to remove and replace tubes later and to adjust tuning slugs without tearing the whole shebang apart.

A small L bracket under the antenna loading capacitor accommodates the antenna change over relay.

Plate current on the completed final amplifier rises to about 50 ma off resonance and gives maximum output when loaded to about 35 ma. Loading above the 35 ma level results in loss of output. Once the stages are all aligned at about 7.1 mc, the entire band can be covered with only minor touching up of the final tuning.

Receiver

The receiver front panel controls consist of a Japanese import vernier for tuning, an *if* gain, af gain, phone jack and speaker switch. Access of the Clapp oscillator tuning slug is also available under the tuning vernier. The panel as can be seen from the three-quarter photo is a mirror image of the transmitter control layout. As any fool can plainly see, that's where the "TWINS" comes from.

Construction of the receiver, shown in Fig. 3, produced far more headaches than had been anticipated. If its construction was to be under-

WIN

this complete hy-gain

ANTENNA SYSTEM

WITH 56 foot Spaulding Tower

WORTH OVER $500.00

or one of 24 other valuable prizes

IN HY-GAIN's
SECOND ANNUAL

Skyhook

CONTEST

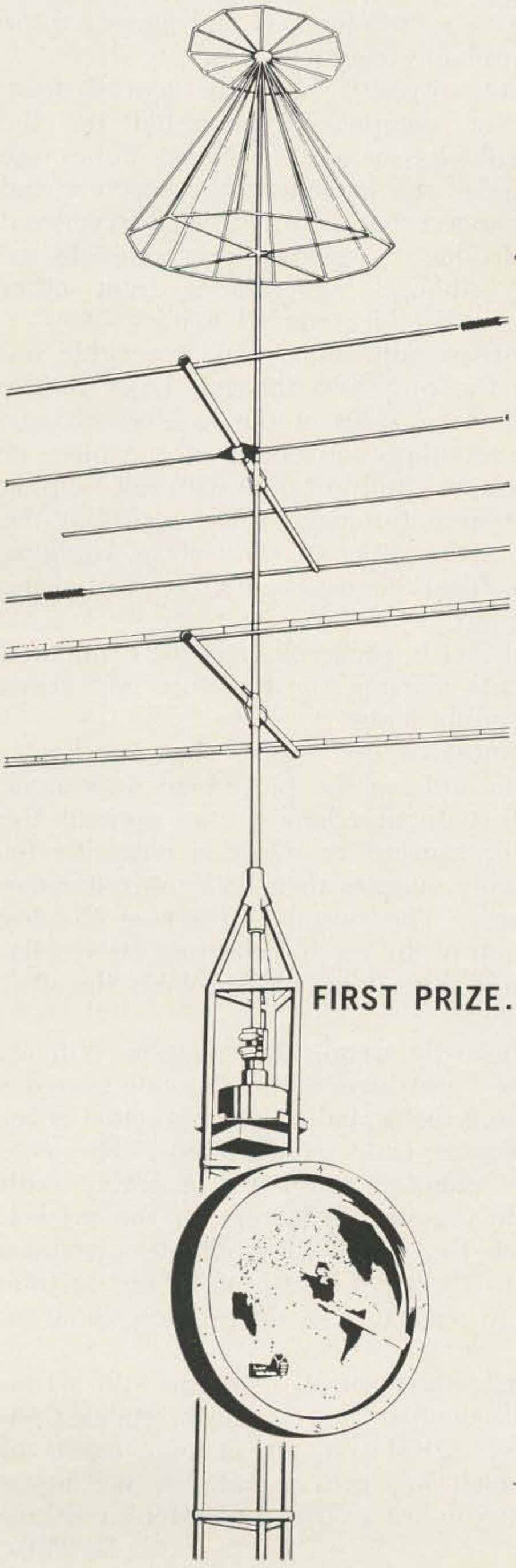

Contest open to any Licensed Amateur* on Planet Earth. All entries must be postmarked no later than 23:30 GMT, 31 December, 1962.

NOTHING TO BUY ... Here's all you have to do — Simply pick up an Official Skyhook II Entry Blank from your favorite Hy-Gain distributor and, in twenty-five words or less, complete the following statement: "If I were the New Product Manager of Hy-Gain, I'd ask my engineering department to develop an antenna design that would (25 words or less)." Send your entry to Hy-Gain Antenna Products, NE Highway 6 and Stevens Creek, Lincoln, Nebraska. All entries will be judged on the contribution the suggestion offered will make toward universally improving reception or transmission and will remain the property of Hy-Gain Antenna Products, Inc.

FIRST PRIZE.... 3.5–500 MC including RBX-1 Rotator and Directional Indicator, DS-1 Discone with range of 50 thru 500 mc., TH-4 Tribander, 402-B 40 Meter Monobander, 2BDP Multiband Doublet and 56' Spaulding Tower.

2nd PRIZE – DB-24 Duobander, 20-40 meters
3rd PRIZE – 18HT All Band Vertical
4th PRIZE – TH-4 Thunderbird Tribander
5th PRIZE – TH-3 Thunderbird Tribander

*Sorry, we must exclude entries from Cities, States or Countries where contests are prohibited by law.

BE A WINNER! Pick up an Official Entry Blank TODAY and submit your suggestion NOW to:

hy-gain **antenna products**
8405 NE Highway 6
Lincoln, Nebraska

taken again some different techniques would be employed. Let's see what actually was done and what changes would be made.

Ventilating holes were liberally drilled in the receiver chassis bottom, rear and left side. The same system was used as was employed in the transmitter. Similar holes were drilled for the speaker which was located in the front bottom of the chassis. The speaker, an 89 cent 4-8 ohm, 4″ diameter job of unknown manufacture, output transformer and phone jack were installed and wired together before the other sub-chassis was installed.

The second chassis contained the audio amplifier and keying monitor. Small values of coupling capacitors and cathode by-passes tailor the audio output to peak around 1 kc. No trouble with the audio portion was experienced but the relaxation type keying monitor oscillator proved critical and the chassis had to be removed and the values of the circuit changed to obtain proper operation. Builders of this monitor circuit may have to juggle components slightly to achieve a pleasing note. If the area underneath this sub-chassis is cut out of the main chassis so that access can be made available, the wiring changes of this nature can be made without removing the entire assembly. The cutout can be covered with a perforated plate held in place with self-tapping screws.

The *if* stages, bfo and detector circuits were assembled and installed next. This portion of the receiver produced all of the headaches and the sub-chassis was removed and worked on a dozen times before satisfactory operation was achieved. Again a plate covering an access hole on the left side of the main chassis would prove a godsend.

The receiver front end was designed around the tried and true "Converterette" circuit published several years ago in CQ. Receiver coverage was adjusted to correspond roughly to the same vernier dial readings as the transmitter by removing plates from the tuning capacitor. The only precaution necessary is an adequate shield between the rf and mixer tuned circuits. No trouble was anticipated or experienced with this portion of the receiver.

The selectivity of the 1700 kc *if* strip, while not considered inadequate, could be improved by the addition of a crystal filter preceding it. The crystals intended for the job were found to be sour so the filter was by-passed temporarily. Adequate gain in the *if* strip is available to take care of the filter insertion loss. Without it the rf gain is normally run at minimum. Anyone contemplating the design of a similar receiver would do well to consult "Phasing for Audio Selectivity" by Jim Kyle, K5JKX/6 in the November 1961 copy of 73. This little device would go a long way toward increasing selectivity and, if built in as part of the af amplifier, might eliminate any need for a crystal filter and permit one stage of *if* to be eliminated.

All brackets and sub-chassis were hacksawed from an old aluminum bottom plate. The garden variety of "Do-It-Yourself" aluminum sheet is a little too thin and flimsy for the job but probably could be used.

The internal photo shows the general interweaving of components mounted on the various sub-chassis and brackets. Tubes are placed under the *if* cans in the receiver and are so arranged that all tubes can be removed without having to remove any complete assemblies although some tubes from other assemblies must be removed first.

Screwdriver adjustments are accessible underneath the unit and through holes in the cover plate and sides of the receiver chassis.

The cover plate was cut from one piece of sheet aluminum and installed with self-tapping screws. It offers the main "stiffening" tying the three chassis together. A short strap, bridging the three chassis, across the bottom finishes the stiffening job.

Rubber feet in each corner of the completed rig prevents marring the furniture and keeps the womenfolk happy.

The "buttoned up" rig becomes mechanically stable and can be picked up and shook vigorously without changing the note of the receiver or transmitter. Drift is noticable for about twenty minutes then both units stabilize satisfactorily. The mistake of laying the log book on top of the rig and shutting off ventilation through the holes will prolong the drift indefinitely.

The entire rig weighs 12½ pounds. With its built-in key and monitor oscillator it becomes an ideal unit for providing code practice or for giving Novice code examinations. The note from the monitor compares favorably with most code practice oscillators on the market. Design of the transmitter circuit precludes damage to the rig because of failure to tune the final to resonance or operation without an antenna.

The first afternoon of operation into a run-of-the-mill doublet bagged seven states from the Sunday QRM with an average report of 569X. Which only proves that they will never know that you are a QRP if you don't tell 'em!

. . . W2TBZ

TEST EQUIPMENT—STEREO COMPONENTS
COMMUNICATIONS EQUIPMENT
TRANSMITTER PARTS

• TEST EQUIP.—NEW, ORIG. BOX

VHF bridge, Hewlett-Packard #803A	$595.00
Phase meter, Industrial Instruments #200AB	325.00
Power supplies, Lambda #28	45.00
Electronic switch, Teletronics model #ES180	295.00

• STEREO—NEW—WARRANTEED

Mfgr'd by Crosby

Stereo receiver, 80w, #R80MX	orig.	$425.00	now	$243.95
Stereo receiver, 28w, #6500EMX	orig.	280.00	now	133.95
AM/FM tuner, Crosby #100	orig.	159.95	now	49.50
AM/FM tuner/Multiplex, #100MX	orig.	179.50	now	74.50
Stereo pre-amp/amp, 40w #225	orig.	150.00	now	69.95
Stereo pre-amp/amp, 28w, #6800EM	orig.	115.00	now	44.50
Transistor micamp. #30	orig.	10.25	now	2.95
Multiplex adapter, #MX101	orig.	69.95	now	34.95
Multiplex adapter, #MX102	orig.	49.95	now	29.95
Multiplex adapter, #MX103	orig.	39.95	now	23.95

• TEST EQUIPMENT—USED

All in good working condition

Electronic counter, Potter model #850	$400.00
Audio freq. meter, H.P. #500	99.50
Audio freq. meter, G.R. #834B	75.00
Electronic switch, Dumont #330	195.00
Precision capacitor, GR #722	125.00
Diode tester, Teletronics Lab #DT-100	75.00
Diode tester, Teletronics Lab #DT-257	150.00
Frequency meter, GR #1141A	65.00
Output power meter, GR #583A	75.00
VTVM, GR #726A	50.00
VTVM, HP #410	95.00
Audio oscillator, HP #200C	65.00
Pwr. supply, TLI #PS-140 (same as HP #712A)	125.00
Pwr. supply, const. cur. & const. volt. TLI #PS-110	150.00
Wave analyzer, HP #300A	295.00
Distortion analyzer, HP #330B	195.00
Double pulse generator, Teletronics TLI #PC100	195.00
Millimicroammeter, RCA #WV84	55.00

• COMMUNICATION EQUIP.—USED & NEW

All in good working condition

Collins #51J1 receiver with cabinet	$275.00
Antenna coupler, **new,** 2kw, #CU-362/FRT	175.00
Frequency shift keyer, **new,** gov't type #MD-200/FRT	475.00
Viking mobile xmitter, used, in good condition	65.00
Heath DX100 xmitter, used, in good condition	145.00
Eldico ssb 500 watt linear, 80 thru 10, used	195.00
RME receiver #4350, with xtal calibrator	165.00
Hammarlund HQ-140 receiver	169.00

TRANSMITTER PARTS—ALL NEW

Purchased to gov't spec.

Capacitor, vacuum, Jennings, 10-400 mmf, 10kv	$59.95
Capacitor, var., 4 sec, 241.2 mmf/sec	5.00
Cap., var., 12-224 mmf, Johnson #250E20	4.20
Cap., var., 425/425/850 mmf, Cardwell #C1009959	25.00
Cap., var., 15-353 mmf, Johnson #350E20	7.50
Cap., var., 45-800 mmf, Johnson #800D35	12.95
Cap., mica, 2000 mmf, 6000 v, JAN #CM75B202J	12.50
Cap., mica, 1500 mmf, 6000 v, Jan #CM75B152J	12.50
Cap., oil, .5 mfd, 4000 v pk	2.95
Cap., oil, 4 mfd. 4000 vdcw, #CP70E1EM405V	11.50
Cap., oil, 10 mfd. 1500 vdcw, #CP70E1EH106V	3.50
Crystal oven, 100 kc, Bliley #7C911	35.00
Tuning inductor, var., Johnson #226-1	29.95
Relay, Struthers-Dunn #218DXB105	7.50
Relay, 25a, 115 vac coil, RBM	4.95
Relay, keying, .5a, 6000v pk dc 110vac coil	6.95
Relay, time delay, adj., spdt, Str.-Dunn #PSAP14	14.95
Choke, MIL-T-27:	
10hy, 250ma, 3500v test 40 ohm	4.95
10hy, 110ma, 1500v test 50 ohm	3.75
10hy, 430ma, 2500v test 18 ohm	14.95
15hy, 60ma, 1500 v test, 1600 ohm	2.00
7.5hy, 280ma, 1500v test, 75 ohm	4.50
Meter, 2 inch, 0-1 madc, rd., #MR25W156DCMA	3.25
Meter, 0-50 microamp, #MR25W050DCUA	4.50
Meter, 0-300 acv, RD., #MR25W300ACVV	3.75
Meter, 0-5 kvdc, RD., #MR25W005DCKV	3.75
Meter, 0-500 madc, RD., #MR25W500DCMA	3.25
Meter, 0-5 madc, RD., #MR25W005DCMA	3.25
Meter, 0-500 vdc, RD., #MR35W500DCVV	3.95
Meter, elapsed time, GE, 115vac, 60 cy	9.95
Transformer, MIL-T-27, rect. fil. 5vct, 8000ins	5.40
Transformer, MIL-T-27, plate, 6300 vct, 5000ma	27.50
Transf., MIL-27, plate pri 220, 2770vct, 680 ma	10.95
Transf., MIL-T-27, modulation for (2) 4-125A	32.50
Transformer, auto, pri 115 v, sec 220/115, 2500kva	12.50
Var. line transformer, adj. input 103.5 v to 126.5v or 207v to 253v, 60cy., 1 phase, output 82.8v to 151.8v or 186v to 278v, 33 or 16.5 amp, adj by crank GE #31D2030G1	135.00
Tube, Eimac #4-400A	29.00
Tube, Eimac #4-65A	13.50

WRITE FOR COMPLETE LISTS OF STEREO & AMATEUR COMPONENTS

SEND CHECK OR MONEY ORDER
25% with COD—Exps. chgs. collect
Minimum order $10.00

Serving Amateurs and Industry Since 1945

ALGERADIO ELECTRONICS CO.

37 Greenwich Street
Hempstead, New York
Phone IV 9-0808

A Ham Looks at the

Heath Warrior

Don M. Wherry W6EUM
2121 Grandview Drive
Camarillo, Calif.

A RECENT EXAMINATION of the QSL cards received here at W6EUM during the past two years revealed an interesting fact –for the cards received, over 44% of the stations involved used some model of Heathkit transmitter. This fact struck your writer with some little impact. There must be some reason for such a situation and since he does possess a well known 140 watt SSB transmitter, the decision was made to look into it by the purchase of a Heathkit Warrior Linear Amplifier.

This article is an attempt to review this Warrior as Joe Blow ham might see it and not necessarily as an advertising agent for the Heath Company might.

When you, as the purchaser, receive the unit you will be impressed by one thing–it is heavy (shipping weight 99 pounds). This would immediately indicate rather solid construction and, upon unpacking, this belief is verified. The chassis is made from heavy gage steel, the panel and cabinet are solid construction and the transformers, while not oversize, seem to be adequate. The chassis, in fact, is outstanding in its solid, heavy construction. It is made in two parts, the sides and the top, with the top, for example, bolted to the sides with twenty-two machine screws and nuts. Not self tapping screws, but 22 machine screws–shades of military equipment.

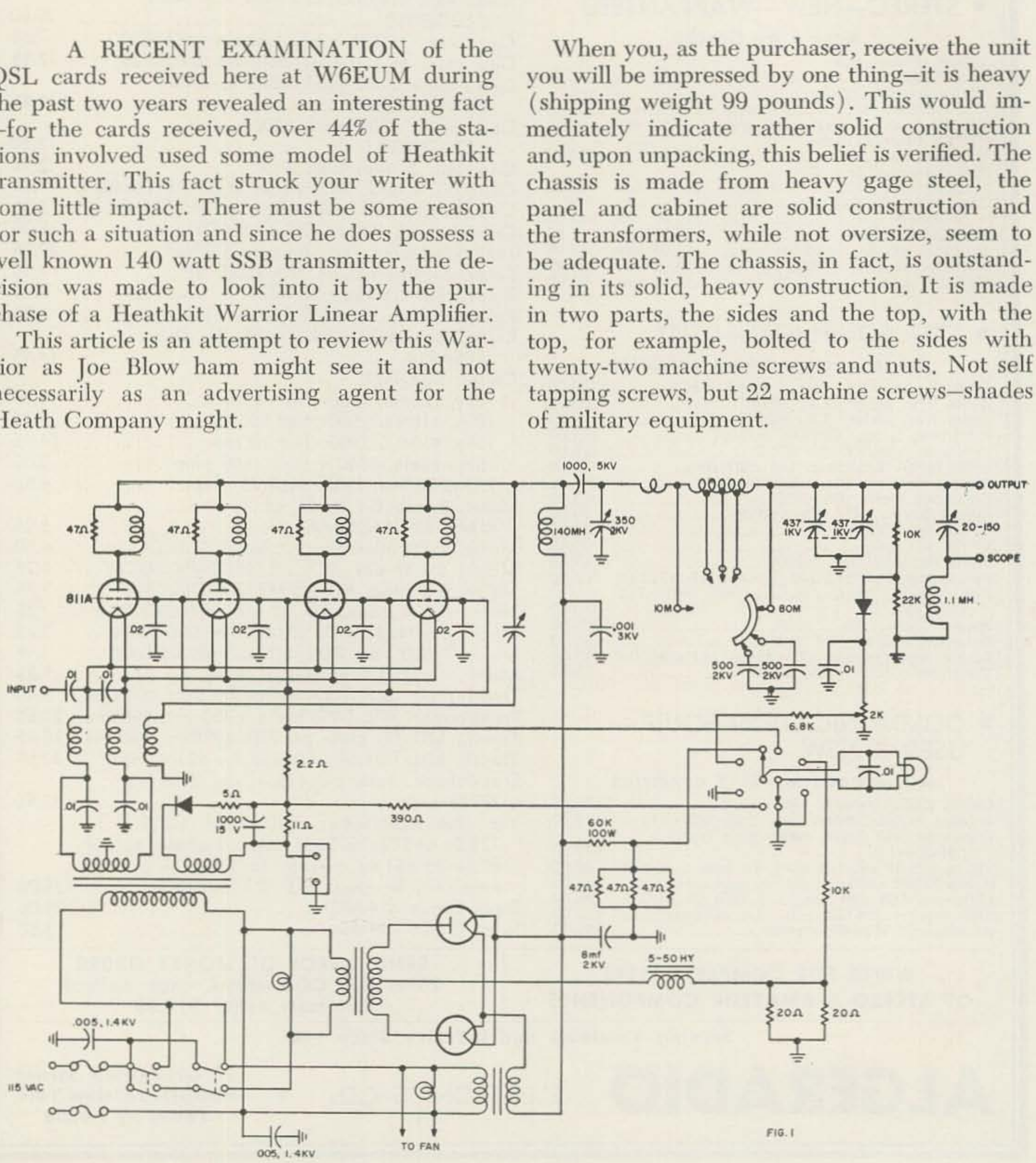

FIG. 1

The general parts, condensers, resistors, tubes, etc., are standard quality brands–RCA, Johnson, etc. No attempt at all was made to cut financial corners on parts.

The mechanical assembly was straightforward and offered no difficulty with but two exceptions. One machine screw holding the rf shield around the rf section was quite inaccessible, taking the special nut starting tool which they furnish, and the use of long nose pliers to start. The second exception was a little more serious. The front panel has two indicator light assemblies which go through the front escutcheon plate, the front panel and on through the chassis. In my unit the holes in the three pieces were not quite in line which necessitated a few judicious swipes with a round file. The material filed off probably amounted to only a couple thousandths of an inch, but if the assembly doesn't go together it might as well be an inch.

Electronically the circuit is a standard grounded grid linear amplifier. The drive is applied via a 50 ohm co-ax directly to the filaments of the four 811A tubes. The rf is coupled to both sides of the filament through disc ceramic capacitors. The rf choke in the filament leads is physically quite small–by B and W standards–and consists of a bifilar winding about 2½ inches long by 1 inch in diameter, wound around an iron core which apparently is made of normal slug material. The interesting part of this assembly is the feedback winding which is spaced over the filament portion and is connected in series with a neutralizing condenser to the plates of the 811A's.

The unit is very easy to drive, their statement of 50 watts needed to drive it to a full KW seems to be a perfectly safe statement if a reasonable SWR is present in the output co-ax. No exact measurements were made but on the lower frequency bands a full gallon was possible at something less than 50 watts. This is output from your exciter, of course, and not input. An input of around 75 watts seems to be a safe minimum figure. Of course if your exciter is a little short on power you can drive it to something less than a KW. It will operate fine at 700 watts, for example, with considerable less than the rated drive for a KW.

The plate circuit is also normal. Good symmetry is practiced around the four 811A tubes, each of which has their small parasitic suppressor mounted in a symmetrical setup. The tank coil is made of good size wire and appears to be adequate–especially the 10 meter coil which is heavy copper tubing. The band switch could be a little heavier. It looks a little small for a KW but again it works fine and in view of the low plate voltages used (1400 to

500 Watts PEP!

Complete transmitter, including heavy duty power supply.

Features

Upper and lower sidebands on all ranges
Power output control 75-500 watts
Automatic level control (A. L. C.)
Meter for monitoring plate current and transmitter output
Provisions for FSK
Rugged heavy duty cast aluminum chassis
Modern styling and extra compact for table top use
Heavy duty full time blower
Smooth tuning 100-1 VFO tuning
500 watts PEP
Carrier suppression more than 50 db
Unwanted sideband suppression more than 45 db
Spurious frequencies down more than 45 db
All Crystals included
VFO Stability: 50 cps. after one-half hour warmup
Pi network output. 45-100 Ohms
Voice control
Anti-trip circuitry

Frequency Ranges: 3.5-4.0 mc, 7.0-7.5 mc, 14.0-14.5 mc, 21.0-21.5 mc, 28.0-28.5 mc, 28.5-29.0 mc, 29.0-29.5 mc.

TRI-STATE Electronics, Inc.

2734 Lee Hwy., Falls Church, Va.

Send information on the TRI-X-500 SSB Transmitter to:

Name .....

Address .....

City ..... State .....

Here is the sensational **SWAN**

SINGLE SIDEBAND TRANSCEIVER

- **The ultimate in TALK-POWER at Low Cost**
- High Efficiency, One Band Design
- Proven Reliability; Highest Quality
- 240 Watts PEP with 800 Volt Supply
- Mobile, Portable, or Fixed Station

Models for 20, 40, and 75 Meters
Now in Production

$275
Net Price

Ask your dealer for additional information

- *ASK THE HAM WHO OWNS ONE*

Swan Engineering Company OCEANSIDE, CALIFORNIA

1600) this is not really a serious problem. The contact spacing is good so no danger of rf arcing is present, especially since the peak voltages under SSB or CW are not nearly as severe as those with a KW using AM modulation.

The standard pi network is used for the output tank circuit. The ability to match an antenna load of 50 to 75 ohms is advertised and is a conservative figure. No loading problem should exist with any tolerable SWR in the feed co-ax.

An interesting adjunct to the rf output circuit is a small condenser and an rf choke from the output line to the ground. The midpoint is brought out to a small jack on the rear chassis apron for use as a feed for the vertical deflection plates of your scope—or your vertical input amplifier if your scope has good enough frequency response. This will allow you to watch your scope and get some indication of your modulation characteristics. It may not be exactly a laboratory method for modulation monitoring but it does help.

The neutralizing system, as mentioned earlier, uses a variable condenser from the plates of the 811A tubes, through the condenser to the coil which is wound around the filament choke to the ground. The neutralizing process is described in the manual as simply spacing the condenser plates a prescribed distance apart. This seemed to be a very rough way to neutralize and some doubt existed in my mind as to the effectiveness of this method. However, upon operational test the amplifier is perfectly stable with no indication of regeneration on any frequency.

The metering system measures the grid current, plate current, relative power output and the high voltage. This is indeed fine—these are exactly the things the operator should know. The tendency of modern transmitter manufacturing concerns to simply meter the relative power output leaves me cold. For the added price of a switch and a few resistors it seems that the policy of metering only the output is very ill advised. I am of the opinion that the prime reason it is done that way is to conceal the fact that a fixed loading circuit does not always load your final the way you might wish. How many of us have a perfect 1::1 match to our antenna?

The bias supply is taken from a special ten volt winding on the filament transformer, half wave rectified, filtered and bled through a 5 ohm and a 11 ohm resistor. The voltage for the tube grids is taken from the junction of these two resistors and is very stiff, being held very

close to the 4.5 volts desired when under modulation. The grounded end of the bias supply is brought out to a terminal board on the rear chassis apron where it may be grounded directly or placed in series with an external (or internal for that matter) voltage of approximately 50 or more volts to furnish cutoff bias for standby or "no modulation" conditions. This is desirable because some modern exciters generate a hash while in the "on" status but with no output, such as is the case when no speech is present on SSB or the key is "up" on CW. This hash may be amplified by the final amplifier when it is not in a cutoff condition and can be very annoying. Odd as it may seem this hash, which another commercial rig of mine does generate to some extent, did not seem to get through the Warrior, even when only the normal 4.5 volts were used. In any event the addition of some VOX controlled external bias can remedy such a condition easily.

Now, while we are on the subject of bias let me digress from the original theme of this article for a moment and describe a modification which can be placed in the amplifier to furnish this cutoff voltage. Don't turn the page as this modification does not require alteration of the original amplifier, but only an addition. In other words if you might wish to sell the unit at some later date you can return it to its original condition easily and quickly.

Fig. 2 shows a bias and switching arrangement which can be added to the linear to furnish cutoff bias and/or higher operating bias for class C CW operation. The small power supply in the unit furnishes voltage for the cutoff bias and for energizing the control relay —providing a low current plate relay is used. In case an ac relay is used omit R18 and bring out both coil leads as described later in Step 8 of the construction notes. This bias supply and relay will allow several transmitter conditions to exist i.e. 1) by connecting a jumper on the outside of the chassis from terminal 1 of T to the ground terminal on the chassis, normal operation of the amplifier will result regardless of the condition (open or closed) of relay Ry 1, 2) by grounding terminal 2 of T and actuating the relay for transmit, cutoff bias is applied for standby and the normal voltage of 4.5 volts is applied for transmit, 3) by removing jumper from T and actuating relay on transmit a cutoff bias is established for standby and a high operating bias is established for class C CW service, 4) by shorting terminal 1 and 2 of T and not actuating the relay a condition of no cutoff standby bias is established and a high operating bias for class C CW is established. These

ADCOM ADVANCED COMMUNICATIONS

EVERYONE'S TALKING ABOUT

A NEW DC POWER SUPPLY . . . *the* **ADCOM 250** only $125.

DC-DC TRANSISTORIZED CONVERTER

CONSERVATIVE RATINGS
AT 13 VOLTS DC INPUT

800 V	250 MA
275 V	200 MA
0-90V	NEG. BIAS

OTHER TRANSISTORIZED CONVERTERS

ADCOM 500-500 WATTS at 1250 V
PLUS 300 V & BIAS
ADCOM 1000 - 1 KW at 2250 V
PLUS 300 V & BIAS

ADCOM 250AC AVAILABLE
FOR OPERATION FROM
115V 50/60 CYCLE

THE IDEAL SUPPLY FOR YOUR
FAVORITE MOBILE

QUALITY ASSURANCE
at
LOW COST

SEE YOUR NEAREST DEALER

LINEAR SYSTEMS INC.
605 UNIVERSITY AVENUE - LOS GATOS, CALIFORNIA

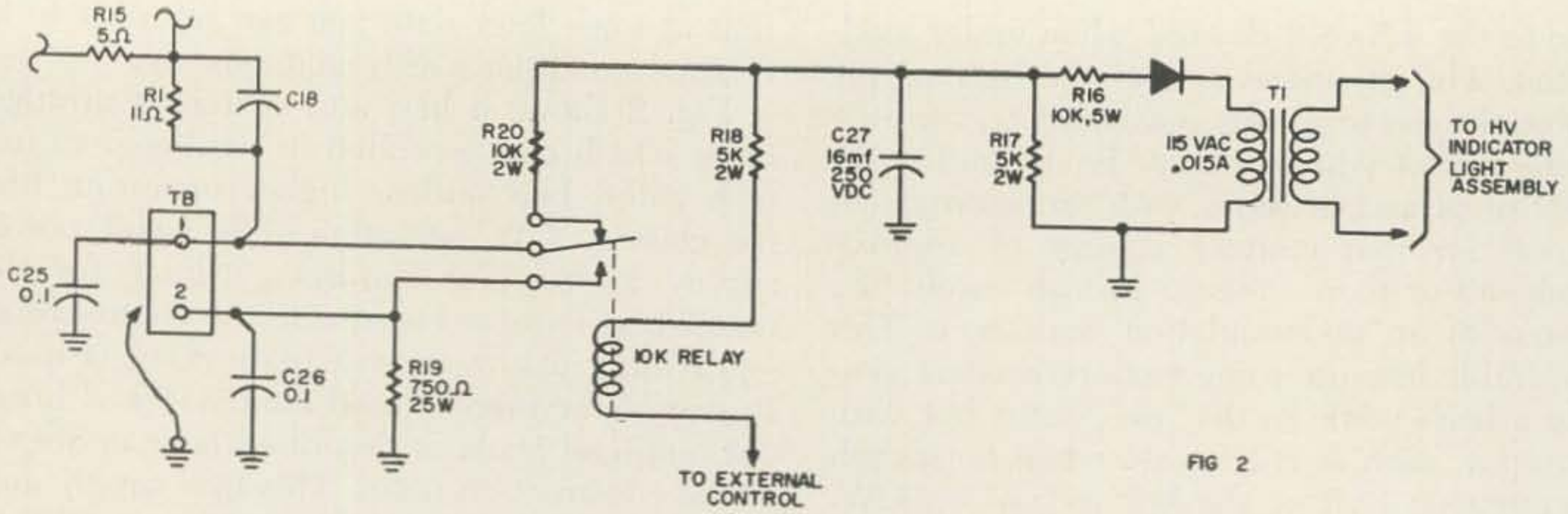

FIG 2

four bias situations will cover any normal operating need and the unit, as can be seen later by the installation instructions, can be easily removed at some later date if desired.

A step by step method of constructing and mounting this unit is given here—

Step 1 Bend an aluminum bracket as shown in Fig. 3. Mount under the nut that holds HV indicator light as indicated.

Step 2 Build circuit shown in Fig. 2. Suggest using printed circuit board or a piece of bakelite. Mount on bracket of Step 1.

Step 3 Remove ground from terminal 2 of terminal strip T and connect a 0.1 ceramic capacitor in its place.

Step 4 Connect center arm of relay to terminal 1 of terminal strip T.

Step 5 Connect normally open contact of relay to terminal 2 of T. Keep wire for step 4 and 5 clear of filter condenser terminal NN2.

Step 6 Connect primary of power transformer in parallel with HV indicator light.

Step 7 Fabricate jumper wire 7½ inches long and connect one end to ground lug on rear of chassis. Put spade lug on free end of this jumper. Use this jumper to ground either terminal 1 or 2 of strip T as described earlier.

Step 8 Bring out free wire from relay coil to outside of chassis by running through same grommet as 115 VAC power wires.*

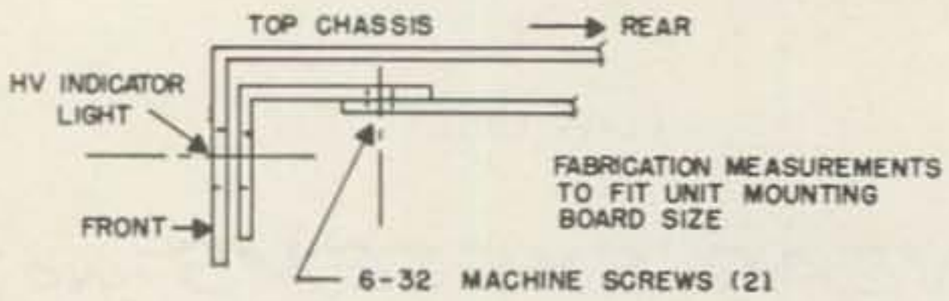

FIG 3

Step 9 Connect 0.1 ceramic capacitor from terminal 1 of T to terminal 2 of terminal strip TA.

Step 10 Cut wire 3 inches long and put spade lugs on each end. To be used to short terminals 1 and 2 of terminal strip T when amplifier is to be used with no standby cut-off bias and with high operating bias for class C CW.

This completes the modification. Now of course this small unit can be mounted on a separate chassis and wired to the outside of terminal board T but it makes a cleaner job to do it on the inside. The relay of the unit can be connected to the VOX circuits of your exciter to be turned on or off with the antenna relay, receiver quieting, etc. If you use an ac relay for your antenna changeover switch it might be advantageous to use and ac relay in the unit and parallel it with the antenna one. Each individual case might be a little different.

Enough for the bias—the power supply is normal except for a slight novelty regarding the choke and power transformer—both which have very large cores. This, perhaps, was to allow fewer turns per volt on the windings and allow larger wire per given voltage. The choke is a swinging type which goes from 5 to 50 henrys, which is quite a swing. Both the power transformer and choke run at a normal warm temperature under both SSB and CW operation—in fact somewhat cooler than was expected or is the case in some other commercial equipment. One other interesting feature of the power supply is that of the switching. The transmitter has two switches—one to turn on the filaments and one to turn on the high voltage. This is to allow the filaments to heat up before the high voltage is applied. The interesting feature is that it does not make any difference which switch you turn on first; the filaments light first. This means that if you make a mistake in turning on the switches you still turn on the filaments first. They are marked Fil

Note * — If an ac relay is used instead of the plate type run both leads from the coil out with the 115 vac.

and HV of course, for those of us who watch what we are doing.

Double shielding is used—the rf section is in its own shielded enclosure which is mounted on the chassis and then the cabinet forms a good shield for the overall unit.

No special TVI precautions were practiced except for the good shielding. A linear running a little on the A side of class B is not much of a harmonic generator so if your exciter is clean your TVI should not be too much of a problem. In case you use the higher bias for class C CW you might run into more of a TVI problem but usually they can be cleaned up with enough effort. Also in the real fringe areas the problem of high power overloading nearby TV receivers will present itself but a good high pass filter on the receiver antenna input will cure that.

The unit comes with the cabinet painted a deep green. The escutcheon on the front panel is a matching green with the panel itself a light grey with a slight green tinge. It's real pretty—if you like green.

To summarize, it seems to your reviewer that Heath has done a very commendable job here—it's a lot of transmitter for $229. The only wish here is that it could have been packaged a little smaller. Nothing about it is on the "skimpy" side, the operation is everything a KW should be and it really puts out a signal. This linear, if it's indicative of the rest of the Heath transmitting line, perhaps explains that 44% noted earlier.

. . . W6EUM

Parts List

R1 —part of original unit
R15—part of original unit
R16—IRC 10K 5 Watt
R17—IRC 5K 2 Watt
R18—IRC 5K 2 Watt
R19—750 ohm 25 watt IRC type 2D
C25—Disc ceramic 0.1 ufd
C26—Disc ceramic 0.1 ufd
T1 —115 volt .015 selenium rectifier type
Relay—See notes

Letter

Dear OM:

Here is a list of my fellow Cubans who are using our hobby to spread communist doctrine from the Isle. CO1-AF, AH, GN; CO2-BG, BY, CF, CJ, CM, CR, CX, DL, DT, EU, FM, FV, GM, HT, IF, IG, IS, IT, JI, JL, KG, KI, KY, LD, LM, LT, MF, MN, MR, NP, OF, OM, PV, QQ, QS, QV, RO, RQ, RV, SF, ST, TW, VB, VH, VJ, VN, VO, WF, WU, XG, XI, XM, XN, ZL, NC: CO3-AG, BU, JD, MM, NR, PF: CO5-CG, CN, ER, FM, JA, JP, OF, PV, RB, RP, SA, TZ; CO6-AB, ED, FA, FB, GF, JC, KF, NV, PF, XZ: CO7-AI, CA, CG, HS, JM, LM, RQ, RS, RV, SL, SO, LG, FC, XW, JS; CO8-AL, BN, BO, CO, CP, CR, DL, DN, ER, ES, HG, HP, IC, LA, RM, SD. There are many more which we lack proof on so far.

Rafael M. Estevez CO2ZQ
Radio Club of Cuba in Exile
Box 1688, Miami 1, Florida

USED EQUIPMENT—
GUARANTEED A-1 CONDITION

4—VIKING "500" Transmitters (new price $1050) only $495. VIKING VALIANT $269; KWS-1 $895; GLOBE 500-C ($895 new) $425; B & W 5100 $199; DX-100 $149; NC60 w/5 coils $329; NC183-D $199; B & W L-1000-A $229; NC-300 $229; COLLINS 32V3 $299; KP-81 PIERSON $225; VIKING II & VFO $149. Many others in stock. Write & ask.

Complete line of Antennas & Ham Parts.

Distributor for Collins, Hammarlund, Johnson, Hallicrafters, Gonset, National, Drake, B & W.

TOP TRADE-INS!
MISSION HAM SUPPLIES
5472 Mission Blvd. Riverside, Calif.
Phone (area code 714) OV 3-0523

TELETYPEWRITER EQUIPMENT • COLLINS

51J2, 51J3, R-390A/URR Receivers (.50-30.5 MC). Teletype Printers #14, #15, #19, #20, #26, #28. Kleinschmidt Printers #TT-4A, TT-76, TT-98, TT-99, TT-100, GGC-3. Telewriter Frequency Shift Converter. For general information & equipment list, write to TOM, W1AFN, *ALLTRONICS-HOWARD CO.*, Box 19, Boston 1, Mass. RIchmond 2-0048.

SHIPSHAPE SHACK

No more screwing and unscrewing connections, no more dangling, sloppy leads when you have B&W multi-position coaxial switches.

Model 550A conveniently selects any one of five transmitters, antennas, exciters, receivers or other r-f equipment. Model 551A is a two-pole, two-position unit for switching equipment such as r-f power amplifiers in or out of a circuit. Both switches can be used with 52 or 75 ohm lines.

See these efficient, reasonably-priced switches at your B&W dealer, or write us for information.

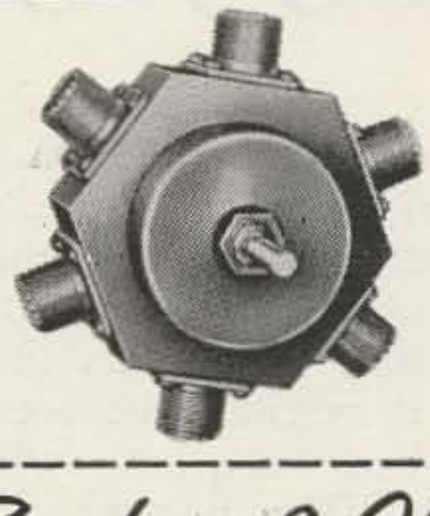

550A—Price: $8.25

551A—Price: $7.95

Barker & Williamson, Inc.
Canal Street & Beaver Dam Road
Bristol, Pennsylvania

Joe's Other World

WHEN she came in as usual to open the curtains to the early-morning sun, she knew this was to be no ordinary day. She made Joe comfortable, doing automatically for him the intimate jobs which had become so much part of her routine that it might have been a piece of her highly-polished furniture which she was putting in order. When he was clean and tidy, she gave him his breakfast, feeding him patiently, making occasional remarks about the weather and the news in the papers.

Usually he hung onto her every word in these moments of intimacy, for she was his only link with the world outside. But today she sensed his lack of attention, that he was thinking of something else. The meal over, she stood up.

"What time do you think they'll arrive?" he asked.

Deliberately she pretented puzzlement. "Who?"

"Fred and the boys, of course."

"Oh, sometime. Depends on whether they have finished it. Might not be today at all. Might be next week."

She felt an immediate flash of compunction, for he suddenly looked like a little boy who has been unfairly punished. But Em had never been a woman to give in to emotion or what she would have called "sloppiness." "I'll switch on the radio for you. There's a nice music programme."

She knew as the room filled with sugar-crested waves of Jerome Kern that Joe would have preferred a different kind of radio sound but it was in her power to decree what he should hear, at least for this morning.

Twice in the routine of the hours that followed she had to climb the stairs to answer his call. Had his friends phoned yet?

With bitter triumph she told him twice—no, there had been no call yet from the Radio Club.

Em was a good woman. For thirty years she had been a good wife to Joe, keeping immaculate the little house which they had been able to buy on account of her penny-pinching. Her cooking was famed for miles around, Joe's shirts were always spotless, his sweaters and socks hand-knitted in intricate designs. All their life she had saved money so that now, when their only income came from insurances and pensions, she was still able to maintain the house and their previous careful living standard.

Em even tolerated her husband's little weaknesses. Joe was allowed to smoke except, of course, in the parlour, whose velvet drapes and hand-embroidered cushions must on no account be sullied with the fumes of tobacco. The ancient refrigerator always had room for a can or two of beer.

But one thing Em had fought all her life—Joe's other world, his hobby, his love for amateur radio. When they had first married she had given little thought to the ominous way he would spring to life, so to speak, when confronted with the load of junk in the attic. Like all young brides she had thought a few months of marriage would change him sufficiently to make him give up all that nonsense. But Joe, gentle and mild like so many big men, was remarkably obstinate on that point. He was hers, body and soul, except for the time he spent upstairs, producing unearthly sounds out of the junk and talking incomprehensible jargon to people thousands of miles away in whom Em had no interest at all.

Joe gave the major part of his wage-packet to his wife, keeping only a small sum for his own meagre expenses. But, by depriving himself of cigarettes and beer for nearly three years, he saved enough to buy himself a communications receiver which was the pride of his life. Em hated this interloper worse than if it were another woman come to break up their marriage. It came to represent for her the other world into which Joe escaped from her and into which she could never penetrate.

GOOD MOBILES GO

HUSTLER

MOBILE ANTENNA
10-15-20-40-75- METERS

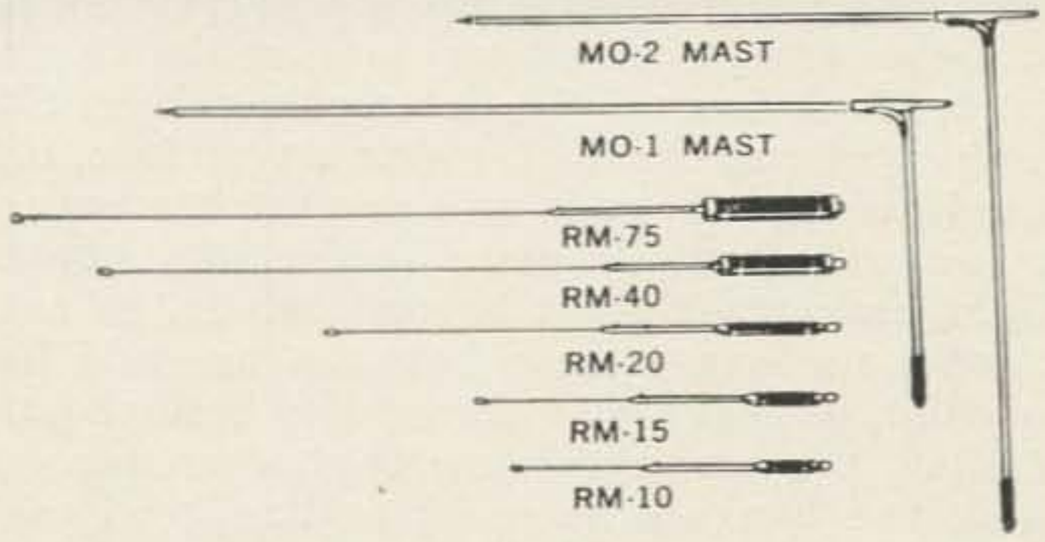

Buy only the mast and resonators for the bands you operate. NO NEED FOR MATCHING DEVICES, NO FEED LINE LENGTH PROBLEMS. Use any length of 52 ohm cable. New, efficient concept of center loading. Each resonator has a coil specially designed for maximum radiation for a particular band. Center frequency tuning is by an adjustable stainless rod in the resonator. The fold-over aluminum mast permits instant interchange of resonators. Mast folds over for garage storage. Mast has 3/8-24 base stud to fit standard mobile mounts, but will perform better with New-Tronic mounts. Power rating is 75 watts dc input A.M. - 250 watts PEP input for SSB.

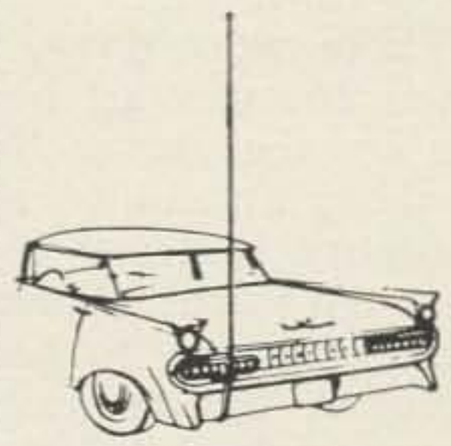

Mast and resonator in mobiling position

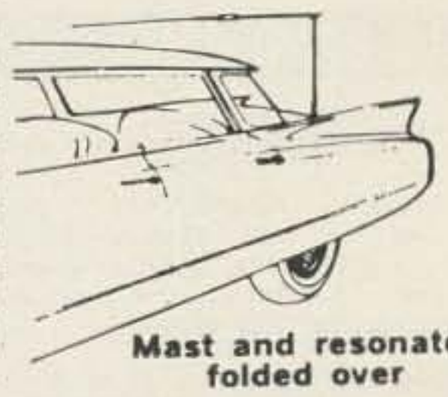

Mast and resonator folded over

RESONATOR WILL WORK PROPERLY ONLY IF USED WITH MO-1 OR MO-2 MASTS. ANTENNA ASSEMBLY CONSISTS OF 1 MAST and 1 RESONATOR.

MODEL	DESCRIPTION	TOT. HGT. of ASSY.	NET
MO- 1	54" mast folds at 15" fr. base	Rear deck or fender	$ 7.95
MO- 2	54" mast folds at 27" fr. base	Bumper	7.95
RM-10	10 meter resonator	80" max. - 75" min.	5.95
RM-15	15 meter resonator	81" max. - 76" min.	6.95
RM-20	20 meter resonator	83" max. - 78" min.	7.95
RM-40	40 meter resonator	92" max. - 87" min.	9.95
RM-75	75 meter resonator	97" max. - 91" min.	11.95

ANY MAST OR RESONATOR MAY BE PURCHASED SEPARATELY

MODEL BM-1 BUMPER MOUNT

Flat alloy steel strap fits any shape bumper, large or small. "J" bolts require only ¼" clearance between top of bumper and car body. Heavily chrome plated 1½" die cast Zamak ball has ⅜"-24 thread. Adjustable for true vertical position. Gray Cycolac base. Heavily cadmium plated....$6.95

Ask your distributor to show you these and other fine NEW-TRONICS products. Write for literature on the complete NEW-TRONICS line.

NEW-TRONICS CORP.
3455 Vega Avenue Cleveland 13, Ohio

However, the junk in the attic accumulated over the years until the receiver was only part of a dingy, dusty chaos perpetually over her head. Em, whose pride was the gleam and gloss of her arrid home, attempted to "clean up" the mess but she met with alarming resistance from Joe. Considerate as ever, he would say,

"Don't you go bothering yourself with the attic, dear. The stairs are too much for you. I'll look after it."

Sometimes, though, when he was away at work, she would trudge up the narrow stairs into the enemy territory and confront the bland, blank face of the detested receiver. She would even run her duster over its surface, for, hate it as she might, it was against her nature to tolerate dust. A more passionate woman might have smashed it beyond repair, so that it could no longer come between her and her husband, but care with money had become part of Em's life and she knew that, even second-hand, the instrument could realize good cash some time.

There were days, three or four sometimes, when Joe was all hers. He would sit opposite her by the stove. Neither of them was particularly articulate, but there was some kind of commune between them. She would knit. Joe read the paper, yawned, scratched himself and went early up to bed. Days after, she would discover, to her humiliation, that "the bands had gone dead," that radio communications the world over had briefly come to a stop, for reasons which were beyond her understanding and which she did not think it worth her while to try to understand.

Once a week, on Thursday nights, her resentment against Joe's hobby rose to hatred level. He would kiss her dutifully, tell her not to wait up for him and drive off into town in the current ten-year-old car to a meeting of the Amateur Radio Club. And every Thursday night Em would sit brooding over her knitting for she knew that, once Joe was with his cronies at the Club, he was no longer hers, no longer her man, her child, her property. He was beyond her control.

She always did wait up for him, greeting him sourly on his return, yawning ostentatiously. But inevitably Joe was so exhilirated by the meeting with his friends that he never even noticed her meaningful glances at the clock.

Sometimes Joe would suggest that she come with him to a social evening organized by the Radio Club for the wives of the radio amateurs. Most of the other women good-humouredly played along with their husbands in this respect, really enjoying the friendly atmosphere of the parties. They accepted their husbands' hobby for, to most of them, it was part of their lives, just as much as wage-earning or love-making. Their men's regular disappearance into the ether was no worse than the drift of other women's husbands into bar or pool-room.

Em could never come to terms with this attitude. She scornfully dismissed the other women, either as fools or flibbertigibbets who didn't look after their men properly. A badly-ironed shirt, a sock darned with the wrong color wool on another man would ensure her scorn for his wife. She never forgave the merry woman who blithely suggested that she forsake her weekly baking session to accompany her husband on National Field Day.

"Reckon she buys all her cakes in the store," she muttered. The condemnation was final, irrevocable.

Joe's friends rarely visited him at home but when they did she would be greeted respectfully; then the two of them would firmly climb the stairs to the attic and that was the last she would see of them for hours. Towards these men she maintained an icy silence, barely polite. They represented Joe's other world.

Then, a year ago, things had dramatically changed. An accident at work had broken Joe's spine. Weeks in hospital had ended with his being brought home to spend the rest of his life completely helpless, paralyzed from the neck down.

The doctor spoke to her pityingly, admiring the fortitude and lack of hysteria with which she bore the blow.

"He might live for months, or it might just be a matter of weeks. Do all you can to keep him comfortable and happy."

He might have spared his pity. Em's stoic expression concealed neither misery nor controlled shock. It hid a singing triumph. For

ALL BAND AMATEUR RADIO TRAP ANTENNAS!

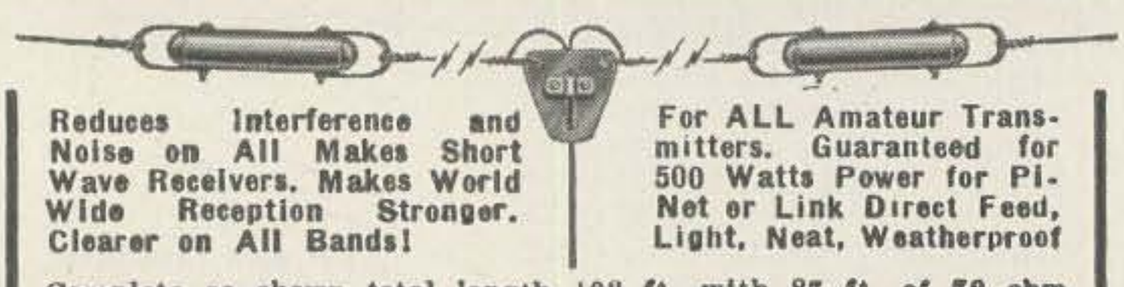

Reduces Interference and Noise on All Makes Short Wave Receivers. Makes World Wide Reception Stronger. Clearer on All Bands!

For ALL Amateur Transmitters. Guaranteed for 500 Watts Power for Pi-Net or Link Direct Feed, Light, Neat, Weatherproof

Complete as shown total length 102 ft. with 87 ft. of 72 ohm balanced feedline, Hi-impact molded resonant traps. (Wt. 3 oz. 1" x 5" long). You just tune to desired band for beamlike results. Excellent for ALL world-wide short-wave receivers and amateur transmitters. For NOVICE AND ALL CLASS AMATEURS! NO EXTRA TUNERS OR GADGETS NEEDED! Eliminates 5 separate antennas with excellent performance guaranteed. Use as inverted V for all band power gain. NO HAYWIRE HOUSE APPEARANCE! EASY INSTALLATION!
80-40-20-15-10 meter bands. Complete.....$14.95
40-20-15-10 meter bands. 54-ft. ant. (best for w-w swl's) 13.95
SEND ONLY $3.00 (cash, ck., mo) and pay postman balance COD plus postage on arrival or send full price for postpaid delivery. Free information.

Available only from:
WESTERN RADIO - Dept. A7-11 - Kearney, Nebraska

WANTED:

TUBES, DIODES, TRANSISTORS, MILITARY, COMMERCIAL LAB-GRADE TEST EQUIPMENT, COMPONENTS, PRC, GRC EQUIPMENT, AIRCRAFT EQUIPMENT BY COLLINS. TOP PRICES. WRITE DETAILS,

BOB SANETT
W6REX, V & H RADIO ELECTRONICS, 2053 VENICE BLVD., LOS ANGELES 6, CALIFORNIA.

FOR SALE

Viking Ranger, excellent condition, Hallicrafters S-40B, WRL Globe Scout 65B. Make an offer.

H. V. Barnes, K1APA
73 Magazine, Peterborough, N. H.

hard physical work and extra financial scrimping held no fears for her. She could face them intrepidly for now she had her husband all to herself again.

Not since the very earliest days of their marriage had she been so close to him. She was his slave—but he was once more utterly hers, at her mercy, the child she had never had. She spent night after night without sleep, helping him through the pain and desperation. She performed uncomplainingly the most menial and offensive tasks. Out of their reduced income she managed to prepare luxurious dishes to tempt him, revelling in the slowness with which he chewed the food, whilst she held the next spoonful ready. On her he relied, not only for the very pith of his existence, but for companionship and entertainment. She read to him for hours. She rarely left the house and then only for necessities. She never spared herself, caring for his wasting body, putting into her scrubbing and bathing and mopping up of filth a devoted energy built up of years of frustration.

Financial difficulties meant sacrifices. Em was scrupulously fair. Her modest diamond engagement ring, her prized silver teapot and the radio equipment were all sold at the same time. Extra cash was needed immediately and it seemed logical that each of them should give up something valued and loved.

A winter passed. Em installed her small portable broadcast receiver in Joe's room. If she heard him the time he tentatively suggested that it might be possible to pick up part of the amateur bands on this instrument, she gave no sign. Joe had come back to her from his other world.

Soon, though, a crack appeared in the structure Em had built herself. One of Joe's radio friends called to see him. Em greeted him with the minimum of ceremony and unwillingly led him up to see her husband. She stalked out of the room, making it quite clear that their talk held no interest for her, but she knew with a shivering dread that something was going to happen.

The man left and she went back to Joe. His eyes were shining.

"They're going to build me a special receiver, Em—one that I can tune myself."

"What do you mean—tune yourself?" she said brutally, "You know you can't move a muscle!"

"One of the boys is an engineer. He's rigged up something with a lever that I can hold in my mouth."

Em's brief happiness dwindled to nothing instantly. She carried on with the tasks of running the house and caring for Joe, but she could feel the excitement building up in the man. Then came the call from the Club to say that the new equipment was complete and would it be convenient to bring it over. Em stalled for a day or so, making the excuse that she was spring-cleaning the room, that Joe

Michiganders Arise!

Descend upon the newest amateur equipment distributor in Michigan. We have set up a big ham display and carry a huge parts stock. We carry all makes of ham gear, including Collins. We'll meet just about any deal that you can make anywhere and give you top notch service to boot. Free home trial? Sure! Trades . . . easy payments . . . and everything you could possibly expect from a group of eager hams selling to hams. Call TEmple 1-3171. Come in and bring your QSL . . . see Bill WA8FCL, Dick WN8ECG and Joe W8VSK.

RSE HAM SHACK

Division of Radio Supply and Engineering Co.

90 Selden Avenue, Detroit 1, Michigan

PRINTED CIRCUIT KIT

They're really simple to make with our new kit. Everything is supplied, complete with two 5 x 7 copper clad boards and easy to follow instructions.

DELUXE CRYSTAL ETCHING KIT: Everything you need, complete. Either kit, postpaid and guaranteed. ---------- $2.00

HAM KITS, Box 175, Cranford, New Jersey

DOW-KEY CONNECTORS

PANEL MOUNT
Durable, silver plated, precision made. Only 5/8" hole is needed, no screws.
ea. 70

DOUBLE MALE
Favorite everywhere. Precision made, rugged locking type. Silver plated.
ea. . . . 1.25

DOW-KEY COMPANY, Thief River Falls, Minn.

WRL **YOU BE THE JUDGE** **WRL**

TWO WEEK TRIAL OFFER

MONEY BACK GUARANTEE

SHIPPED POSTPAID

WRL

FACTORY WIRED

METEOR SB-175 TRANSMITTER

$99.95 Less P.S.

ALL MODES
MOBILE – FIXED

175W-CW – 100W-AM – 140W (PEP) DSB
A simple "flick of the switch" for 75 watt novice power. Don't let high cost rigs kill your hobby -- try WRL's high powered, low cost, 175 watt transmitter for 2 weeks. You must be 100% satisfied, or return postpaid for full refund. Terms: No money down -- $5.00 per month.

WRL **WORLD RADIO LABORATORIES, Inc.**
3415 W. BROADWAY • COUNCIL BLUFFS, IOWA

40 Ft. CRANK-UP TOWER

At

68 MPH

*At 40 Feet

USING A TRI-BAND
10-15-20 METER BEAM

Assembled Weight—20 lbs.
Wind Surface Area—4.9 sq. ft.
Wind Load—86 lbs.
Maximum Element Length—26'8"
Boom Length—12'
Turning Radius—14.9'

OR

148 MPH
with your Tri-Bander at 25'

WORLD'S FINEST
SUPREME
COMMUNICATION TOWERS

*Certified by Reg. Prof. Eng.

$119.50
Model 40-1
F. O. B. PLANT
WITH HEAD MOUNT

BRACKET MTG. KIT $9.50

Tilts over on a heavy base plate for access to motor and array.

Horizontal bracing throughout.

Available from your local distributor, or direct from manufacturer.

SUPREME ELECTRONICS INC.
FRONT & MAIN STS.
UPLAND, PENNA.

wasn't really well enough for all that excitement. Finally, though, realising fully well what she was doing for herself, she agreed to let them come over that Sunday.

On the Saturday night she had to give Joe one of the luminal tablets the doctor had left in her keeping, for he was so excited.

"Just think, Em," he babbled, "It'll be just like old times."

Her lips tightened but, when the Club members arrived, she was forced to have four of her husband's despised cronies trampling up and down the stairs, opening doors and windows, hammering and shouting and bringing a flush excitement to Joe's withered cheeks that all her devoted ministrations had never been able to arouse.

Dry-eyed she waited downstairs for the hubbub to quieten. Finally they came down.

"He's as happy as a kid, ma'am. Just you go on up and look at him."

"I'll wait until you've all gone. Then I can sweep through my front hall before I go wasting my time with that nonsense," she said ungraciously and did not relax until she heard the diminishing roar of their car engine as they drove away.

Stolidly and obstinately and carefully and very thoroughly she swept and tidied where they had trodden. When everything was once more in order she climbed the stairs heavily to Joe's room.

He lay there, still and quiet, with the ghost of a smile on his face. The engineer's tuning lever, no longer needed, lay on the pillow beside him.

Em wept the first bitter tears of a life-time when she came to realize that Joe had died happy and that his other world had won the last battle. ...G3NMR

Letter

Dear Wayne:

Anent my recent article about chirps in a kit vfo. I learned the reason for the poor performance of the dipped micas. They had cavities in the center where there was loose foil. Three out of five that I cracked open were faulty. I bought three of another manufacture locally and they all were solidly o.k. So, we can't condemn the dipped micas, per se, nor the manufacturer either, because a bad lot could get by easily. I have written the kit maker about it.

You may recall that I wrote an article for AP Features about working Russian hams. Someone from 73 mailed me a copy from the White Plains Reporter Dispatch. The article still is being run here and there, and I continue to get fan letters, with the most asked question being how to get into ham radio. I tell them to buy a copy of 73 and drool over the ads. But I made the mistake of recommending the Drake 2B receiver, and got a prompt reply from a lady who wants to know why I recommend the Drake, and it isn't even advertised in 73. Tsk, tsk. Oh well, I still think the Drake 2B is a good receiver, but please, get an ad from them.

The latest query was from a housewife in your area who wishes to buy her husband a ham station for Christmas. Lucky guy! Drake better get that ad in the next issue of 73!

Harold Carlson K7MSL

Supreme SIX METER SSB Transmitter

- Using The McCoy 32B1 Silver Sentinel Crystal Filter
- 75 Watts PEP Input, 6146 Final
- USB - LSB - CW - AM Operation with Carrier injection
- 7360 Balanced Modulator
- Unwanted Side Band Suppression better than 40 db.
- Carrier Suppression better than 50 db.
- Size—Width 12" Height 6½" Depth 7½" Weight 7¼ lbs.

Model SSB-6 Wired & Tested **$199.50**

Model SSB-6 Kit **$159.50**

For additional information, write:

Supreme Electronics, Inc.

FRONT AND MAIN STS. UPLAND, PA.

New Products

Only a Dollar

These little call letter signs are about the lowest cost signs we've ever seen. They are nicely made and great for mounting on top of relay racks, on the operating table, on the back shelf of your car, etc. Be proud of your call . . . display it. Made by New Products, Box 481, Grand Haven, Michigan.

Centralab Catalog

C's catalog 200, a 16 pager, lists everything Centralab makes in the line of controls, switches, ceramic capacitors and packaged circuits. It even gives prices. It certainly is well worth the three cent postcard required to have them mail it to you. Centralab, 900 East Keefe Avenue, Milwaukee 1, Wisconsin. Ahem . . . mention 73 . . . they're not advertising here yet.

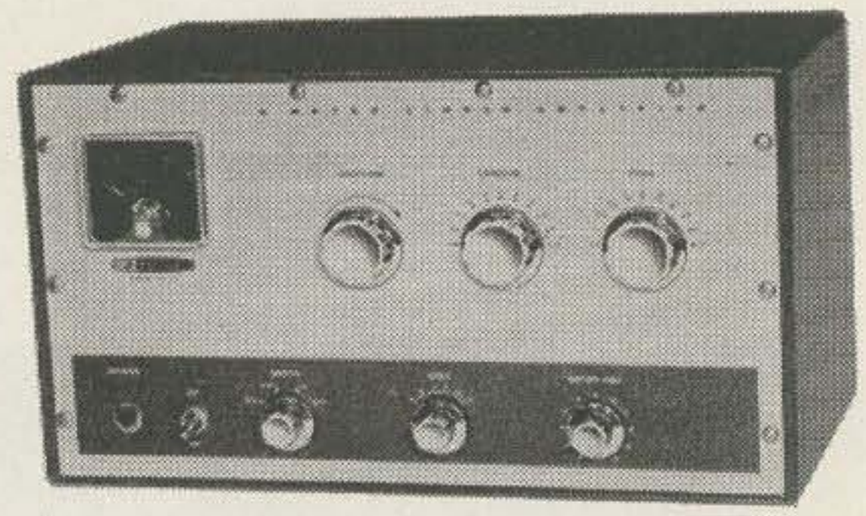

Six Meter SSB

Six meters, though one of our most active bands, has been slow to shift to sideband. One reason is obviously the lack of six meter sideband equipment which is now being delacked by a number of manufacturers. Heath has just recently announced a six meter sideband exciter (10 watts) with built in VFO for $189.95 in the usual complete easy-to-build kit form and a companion linear which boosts that to 125 watts PEP for $99.95. The spex make these look like well designed units and they should do a lot toward popularizing SSB on six meters. Heath will send you full info on this pair if you ask. Heath, Benton Harbor, Michigan.

Request Our New

General Catalog No. 63

by sending us one of your QSL cards.

J.W. MILLER CO. 5917 South Main St., Los Angeles 3, Calif.

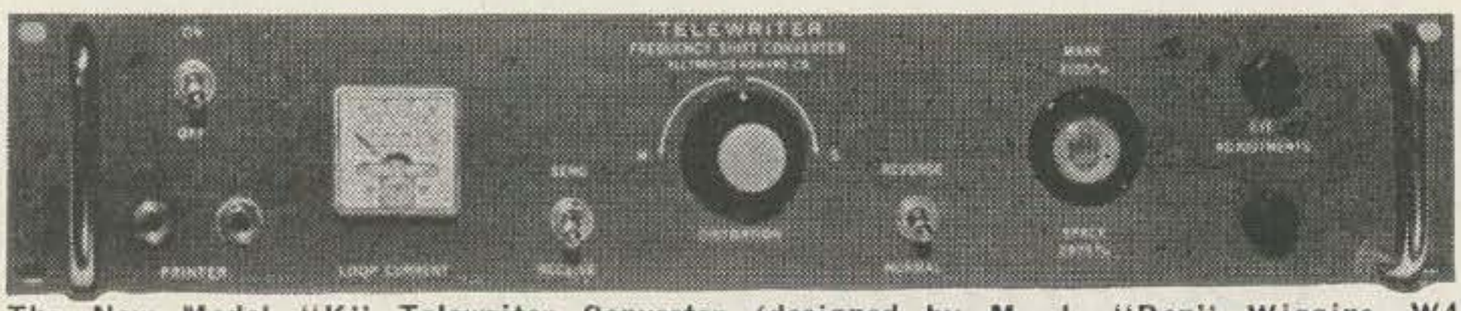

TELEWRITER FREQUENCY SHIFT CONVERTER

$189.00 Rack Mounted—$14.50 for Cabinet

The New Model "K" Telewriter Converter (designed by M. J. "Don" Wiggins W4EHU) includes: 1. Linear audio discriminator with high Q toroids for maximum interference rejection. 2. Advanced keying tube circuit to compensate for distortion with front panel control. 3. Separate magnet current supply with milliammeter. 4. Dual eye indicator. 5. Chassis terminals for polar relay bias. S-R relay, and loop. 6. Front panel jacks for keyboard and printer. 7. Send-Rec. and Polarity Reversing switches. For further information and reconditioned teletype list, write: Alltronics Howard Coa., Box 19, Boston 1, Mass. (Richmond 2-0048).

BOOKS FOR XMAS

Your hamshack is no better than your reference library. This Christmas buy two or three good reference books.

1—ELECTRONICS & RADIO ENGINEERING—Terman. One of the most complete text books ever printed. 1078 pages. Theory, but easy on the math. **$15.50**

5—ANTENNAS—Kraus (W8JK). The most complete book on antennas in print, but largely design and theory, complete with math. **$12.00**

!!—NEW 16th EDITION of IT'S HERE. RADIO HANDBOOK. $9.50

13—REFERENCE DATA FOR RADIO ENGINEERS. Tables, formulas, graphs. You will find this reference book on the desk of almost every electronic engineer in the country. Published by International Telephone and Telegraph. **$6.00**

16—HAM REGISTER—Lewis (W3VKD). Thumbnail sketches of 10,000 of the active and well known hams on the air today. This is the Who's Who of ham radio. Fascinating reading. Only edition. Now only **$2.50**

21—VHF HANDBOOK—Johnson (W6QKI). Types of VHF propagation, VHF circuitry, component limitations, antenna design and construction, test equipment. Very thorough book and one that should be in every VHF shack. **$2.95**

22—BEAM ANTENNA HANDBOOK—Orr (W6SAI). Basics, theory and construction of beams, transmission lines, matching devices, and test equipment. Almost all ham stations need a beam of some sort . . . here is the only source of basic info to help you decide what beam to build or buy, how to install it, how to tune it. **$2.70**

23—NOVICE & TECHNICIAN HANDBOOK — Stoner (W6TNS). Sugar coated theory: receivers, transmitters, power supplies, antennas; simple construction of a complete station, converting surplus equipment. How to get a ham license and build a station. **$2.85**

24—BETTER SHORT WAVE RECEPTION—Orr (W6SAI). How to buy a receiver, how to tune it, align it; building accessories; better antennas; QSL's, maps, aurora zones, CW reception, SSB reception, etc. Handbook for short wave listeners and radio amateurs. **$2.85**

26—5-9 SIGNALS—Orr (W6SAI). A manual of practical detailed data covering design and construction of highly efficient, inexpensive antennas for the amateur bands that you can build yourself. **$1.00**

27—QUAD ANTENNAS—Orr (W6SAI). Theory, design, construction, and operation of cubical quads. Build-it yourself info. Feed systems, tuning. **$2.85**

28—TELEVISION INTERFERENCE—Rand (W1DBM). This is the authoritative book on the subject of getting TVI out of your rigs and the neighbors sets. **$1.75**

32—RCA RADIOTRON DESIGNERS HANDBOOK—1500 pages of design notes on every possible type of circuit. Fabulous. Every design engineer needs this one. **$7.50**

40—RADIO HANDBOOK, 15th EDITION—Orr (W6SAI). This is far and away the best amateur radio handbook ever printed. Over 800 pages. BARGAIN **$7.25**

63—G.E. TRANSISTOR MANUAL 6th EDITION. $2.00

80—SURPLUS RADIO CONVERSION MANUAL VOLUME NO. I (second edition). This book gives circuit diagrams, photos of most equipment, and rather good and complete conversion instructions for the following: BC-221, BC-342, BC-312, BC-348, BC-412, BC-645, BC-946B, SCR-274N 453A series receivers conversion to 10 meter receivers, SCR-274N 457A series transmitters (conversion to VFO), SCR-522 (BC-624 and BC-625 conversion to 2 meters), TBY to 10 and 6 meters, PE-103A, BC-1068A/1161A receiver to 2 meters, Surplus tube index, cross index of A/N tubes vs. commercial types, TV & FM channels. **$3.00**

81—SURPLUS RADIO CONVERSION MANUAL VOLUME NO. II. Original and conversion circuit diagrams, plus photos of most equipments and full conversion discussion of the following: BC-454/ARC-5 receivers to 10 meters, AN/APS-13 xmtr/rcvr to 420 mc, BC-457/ARC-5 xmtrs to 10 meters, Selenium rectifier power units, ARC-5 power and to include 10 meters, Coil data-simplified VHF, GO-9/TBW, BC-357, TA-12B, AN/ART-13 to ac winding charts, AVT-112A, AM-26/AIC, LM frequency meter, rotators, power chart, ARB diagram. **$3.00**

82—SURPLUS RADIO CONVERSION MANUAL VOLUME NO. III—Original and conversion diagrams, plus some photo of these: 701A, AN/APN-1, AN/CRC-7, AN/URC-4, CBY-29125, 50083, 50141, 52208, 52232, 52302-09, FT-ARA, BC-442, 453-455, 456-459, BC-696, 950, 1066, 1253, 241A for xtal filter, MBF (COL-43065), MD-7/ARC-5, R-9/APN-4, R23-R-28/ARC-5, RAT, RAV, RM-52 (53), Rt-19/ARC-4, SCR-274N, SCR-522, T-15/ARC-5 to T-23/ARC-5, LM, ART-13, BC-312, 342, 348, 191, 375. Schematics of APT-5, ASB-5, BC-659, 1335A, ARR-2, APA10, APT-2. **$3.00**

731—HAM—TV—WΦKYQ. This is the only book available on this fascinating branch of ham radio. Describes complete ham TV station that costs under $50. Very simple. **$3.00**

738—SIMPLIFIED MATH FOR THE HAMSHACK BY K8LFI—Unbelievably simple explanation of Ohm's Law, squares, roots, powers, L/C, logs and the slide rule. No student should be without this booklet. **50c**

739—COILS by K8BYN—Wonderfully written and illustrated through discussion of coils, their resistance, reactance, impedance, Q, and distributed capacitance. **50c**

Order Form

Circle the book numbers you wish to order.
Please include cash, check, money order . . .
or something we can deposit in the bank.

Name . . . . . Call . . . . .

Address . . . . . .

City . . . . . State . . . . .

RADIO BOOKSHOP

1379 East 15th Street, Brooklyn 30, N. Y.
(N.Y.C. add 3% tax)

Add 8½% to Canadian Checks

Transistorized Squelch

David Cabaniss WITUW

HERE IS A SIMPLE little circuit that will open the eyes of all mobile men. It is simple, cheap and you can build it in about an hour's time. The few parts required can be squeezed inside most any radio. Here is how it works.

With no signal being received, the negative AVC voltage present at the base of the transistor is low. The transistor is therefore "Cut-Off," and there is no current flow through the 470K collector resistor. The voltage at the collector is now a negative six volts. This negative six volts is applied directly to the grid of the 1st Audio tube, through a 220K resistor, driving this tube to cut-off, thus silencing the receiver. When a signal is received, and the negative AVC voltage is applied to the base of the transistor, the transistor conducts, thus pulling current through the 470K collector resistor. The voltage at the collector drops almost to zero, thus removing the negative voltage from the grid of the 1st Audio stage, allowing the receiver to operate in a normal manner.

The setting of the 50K potentiometer determines the level of AVC voltage necessary to operate the squelch. The 1N34 diode prevents the negative voltage from the battery from being applied to the AVC line. (When wiring this circuit, be sure to note the polarity of the diode.)

The component values shown on the circuit diagram were optimum for the particular receiver in which the author's squelch was installed. When this circuit is installed in other receivers, it may be necessary to lower the value of the collector resistor (470K) or increase the value of the input resistor (18K) (or both) due to the various levels of AVC voltages available from different receivers. Almost any inexpensive PNP type transistor can be used.

The author has spent many agonizing hours "trying" to build various types of squelch (and ANL) circuits using conventional electron tubes; after building this gimmick, I'm convinced that transistors are "Here to Stay."

. . . W1TUW

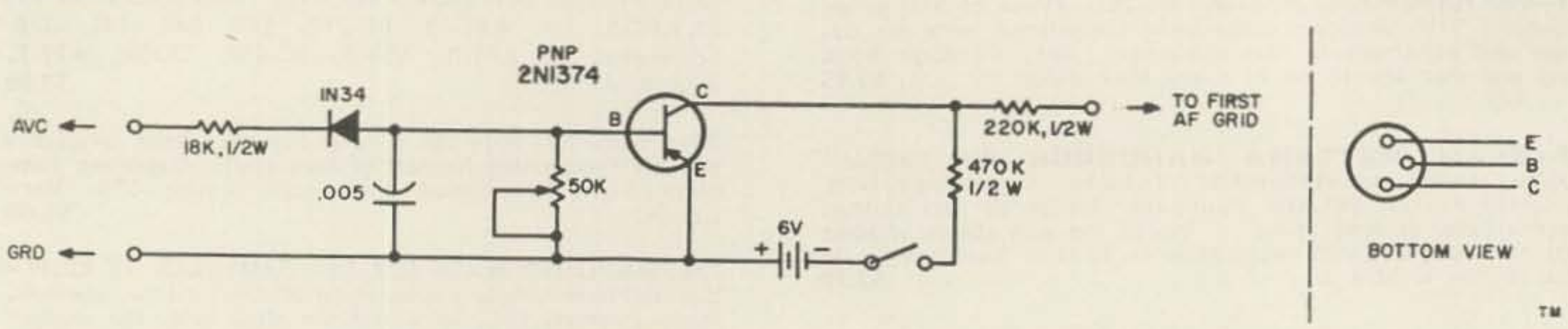

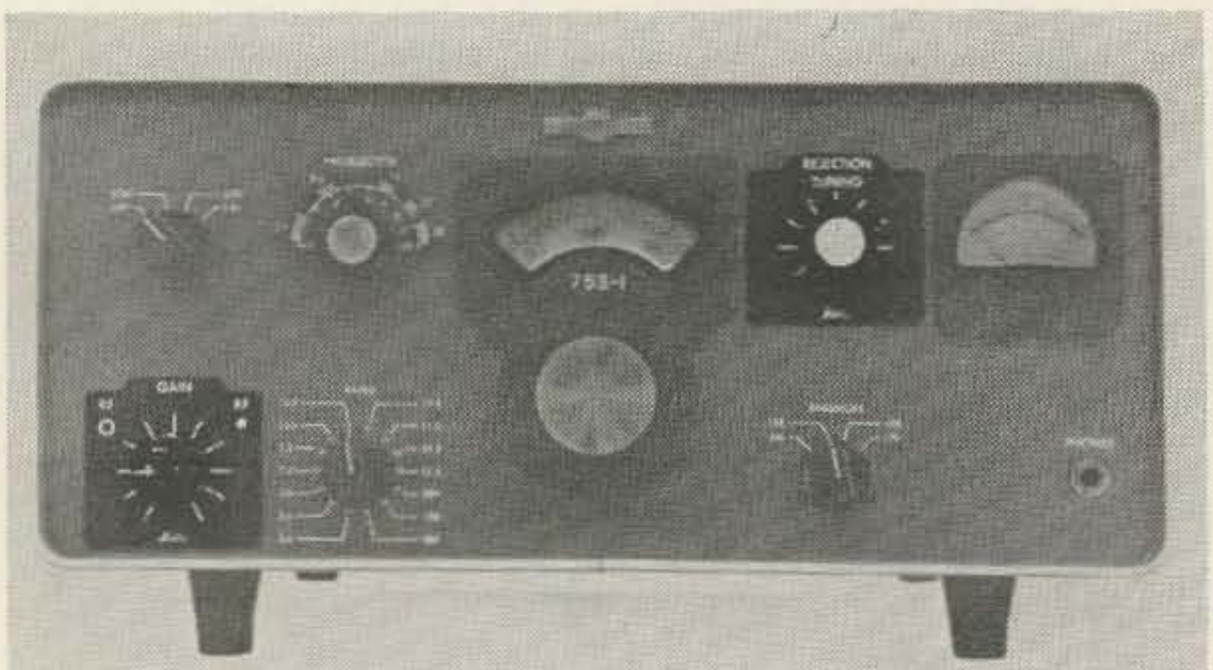

The Waters Notch Filter

Tom McCann K2CM
146 Hillcrest Avenue,
Morristown, New Jersey

TIMELY RELIEF is at long last afforded owners of KWM-2 transceivers and 75S-1 receivers who have frustrated when a big, hot heterodyne parked in their passband and swamped out the wanted signal. Waters Manufacturing has an *inboard* notch filter for these luxurious rigs at less than three percent of the bucks you put into the transceiver and an hour or less of installation time.

Coded 337-S-1 and 337-M-2, either model at $33.95 net, these new units are furnished assembled, complete with the knobs and escutchion plates matching the Collins panel. When the unit is mounted, it looks, performs and handles like Mr. Collins himself furnished it with the equipment in the first place.

No drilling is necessary to mount these units or the controls, except for one hole in the

Pacific Plantronics now offers to the Amateur Radio Operator...

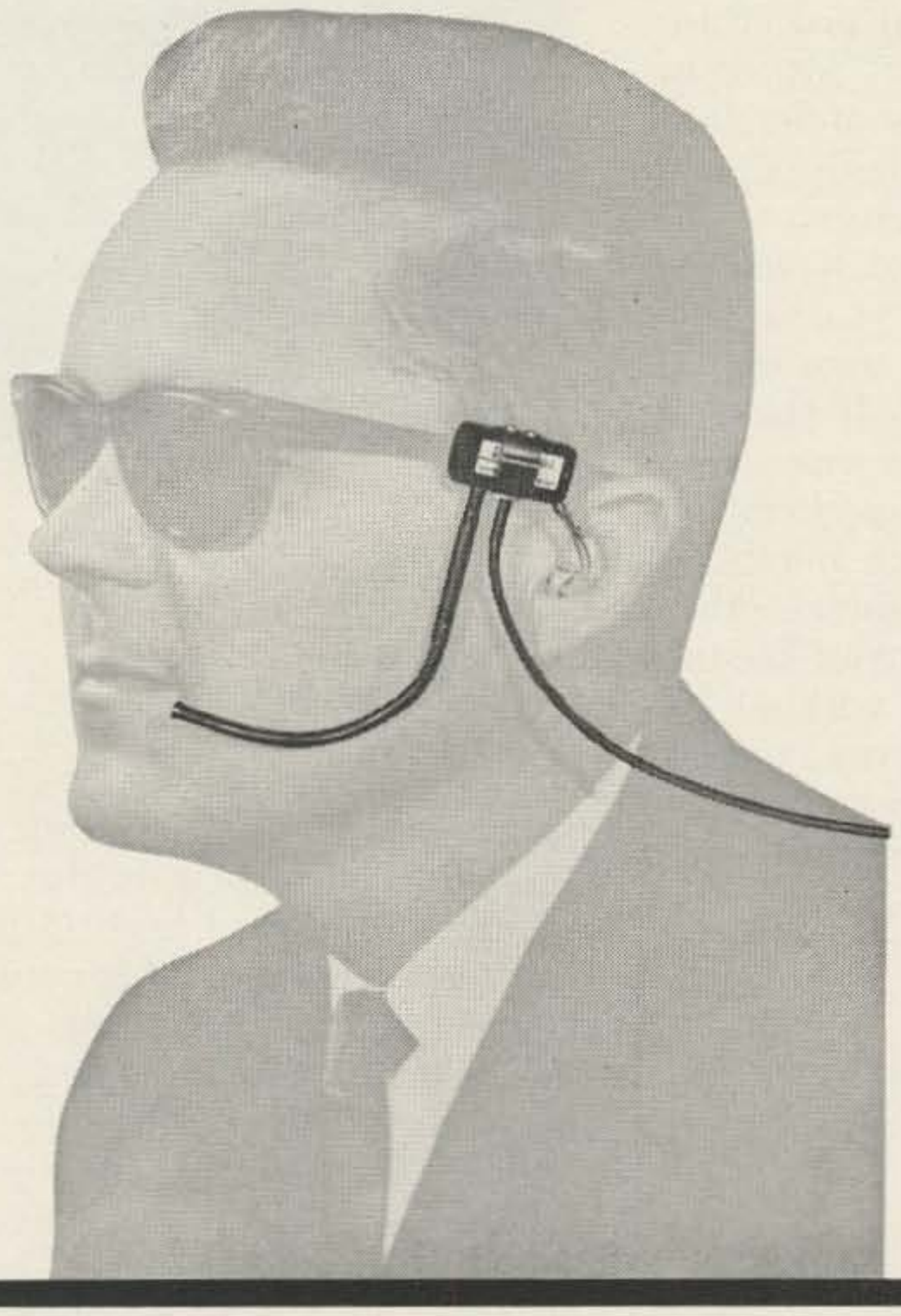

. . . the
MS-30
Dynamic
Microphone-
Receiver

and the
MS-20
Dynamic
Microphone
only

It is a Miniature Boom-Microphone Headset Combination

It is the smallest such device in the world . . . . . 2/3 oz.
It has flown the fastest . . . . . 17,560 mph. (see below*)
It has flown the highest . . . . . 176 mi. (see below*)
It is the MOST in sophisticated communications devices in the world for the money.

MS-20 . . . . **$32.50** Microphone only
MS-30 . . . . **$47.00** Microphone & Receiver

Price includes 1 oz. headband for optional wearing

Voice Engineered Freq. Response:

Nominal 280 — 4200 cps ± 6 db

- 3,000 Ω impedence, microphone
  600 Ω impedence, receiver
- 49 dbm at normal speech level

***A Development of:**

- Pacific Plantronics MS-41 (standard in the Project MA-8 Mercury Astronauts' space suits)
- Pacific Plantronics MS-50 (Soon to be standard on United Air Lines jet fleet)

Dealer Inquiries Invited

(Pat. Appl. for)

PACIFIC PLANTRONICS, INC.
P. O. Box 604 • Santa Cruz, Calif. • GA 6-5858

PACIFIC PLANTRONICS, INC.
P. O. Box 604 • Santa Cruz, Calif. • GA 6-5858

Gentlemen: Please send me Air Mail prepaid

_____ MS-30 Headsets . . . . . @ $47.00
_____ MS-20 Microphones . . . @ $32.50

I am enclosing my check for_____ in payment (please add 4% sales tax to California orders)

Name_____

Address_____

City_____ State_____

KWM-2 panel which is thin aluminum at the point selected and is an easy operation with the template provided. Installation and connecting instructions are furnished in the form of clearly stated numbered items of procedure. For those who are nervous about "lifting up the hood" of these pretty boxes, we understand the Collins service stations will gladly do the installation job for a nominal charge.

Q-multipliers and their equivalent have been available to us now for several years. They can be tempermental things. My own experience with them covers varieties all the way from home-spun, through kits to various commercially available units. Some have been unstable, some have a good depth of notch but take out too much of the wanted signal, others have required a critical adjustment of balance to attain satisfactory suppression without impairment of the wanted signal. So my curiosity was more than a little aroused as to how Waters achieved a remarkably narrow notch

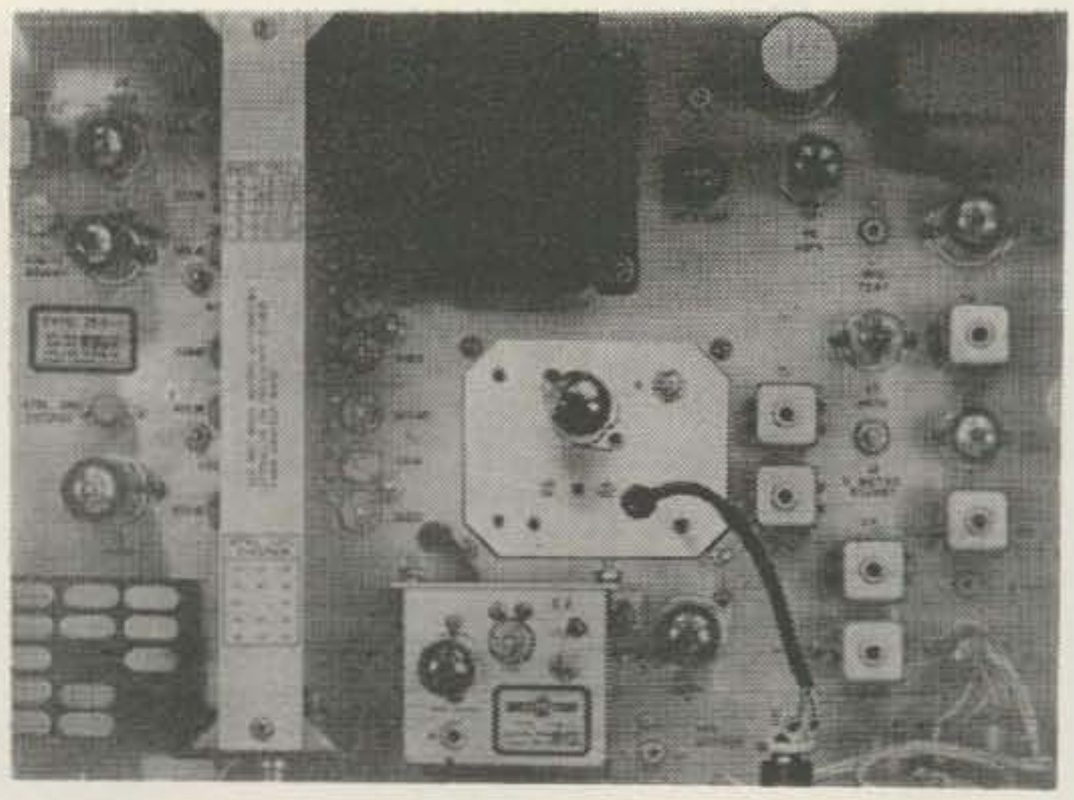

which is effectively deep (40 db) and is at once so stable and easy to adjust to the interfering signal.

Its quite apparent that Waters engineers have shrewdly taken full advantage of the specialized characteristics of the Collins equipment for which their unit is specifically intended. They use a bridge T network with a carefully designed high Q shunt-tuned coil as the series element. This network is in the plate circuit of a 12AX7 tube which serves as a cathode follower coupled to a regenerative amplifier. This combination is connected in series with the *if* amplifier of the set at the low level end. The regenerative amplifier is adjusted below the point of oscillation where the plate circuit has a very high Q and introduces a high loss to a very narrow band of frequencies. The front panel tuning control moves the notch from well outside one edge of the passband, through the passband to well out the other side. Dealing with the uniformly excellent shape factor of the mechanical filter and a fixed passband of 2.1 kc, Waters adopted a tuning range of 455 $\mp$ 2.5 kc, so when not required, the rejection notch is simply dropped over the steep slope of the mechanical filter by tuning it to either extreme. The insertion loss with the tuning control in either extreme position is less than a quarter db.

The Waters 337 unit provides amazingly satisfying relief both from heterodynes appearing in the receiver passband and from "monkey chatter" slopping into the passband from signals just above or just below the selected channel. Sophisticated operators seldom operate their receivers at maximum rf gain unless they are "digging for the weak ones." They run their gain at the point where the incoming signal at its lowest fading level just ticks the S-meter. Operated in this manner, the Q-notch will supress practically any heterodyne except from the KW next door. While the Q-notch is inherently a very narrow band device, smart operators are finding them remark-

73 Products

TV BULLETIN

$1.00 per year

The first issue of the TV Bulletin is now ready for mailing. This is a bi-monthly bulletin designed to keep all fellows interested in Ham-TV up to date on technical improvements in Ham-TV gear and on all activities. In the first issue of the Bulletin there is a list of all known hams who are reported to be getting on the air on TV. The Bulletin is edited by Mel Shadbolt, WØKYQ, the author of the popular HAM-TV book. Get in on this from the first issue and have a complete set of information at your fingertips. The present plans call for six issues of the Bulletin per year, with at least 12 pages per issue.

BOUND VOLUME $15

If you've missed the early issues of 73 this is a fine way to rectify that oversight. This book will keep you up to all hours of the night for weeks trying to catch up with the hundreds of articles we have published and the ridiculous editorials. This volume contains the first 15 issues of 73, from #1 in October 1960 to December 1961. Bright RED, stamped in gold.

YEARLY BINDERS

$3.00

These are also BRIGHT RED and stamped in Gold! Specify what year you are collecting: 1960-1, 1962, or 1963. Preserve those copies for prosperity.

73 Peterborough, N. H.

NEW! A PRE-ENGINEERED HAM EQUIPMENT CENTER WITH BUILT-IN POWER & COMMUNICATION FACILITIES

Bring the ham center up out of the cellar—let the whole family share in the fascinating world opened up by global communications. The handsome styling of this functional unit fits well in any decor—neatly organizes equipment and cables.

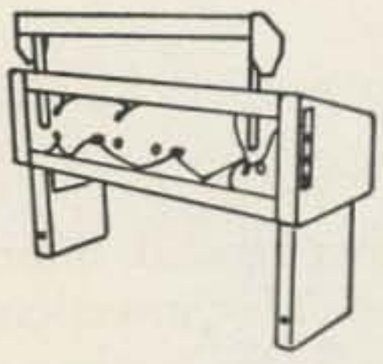

Standard $99.95

Deluxe $139.95

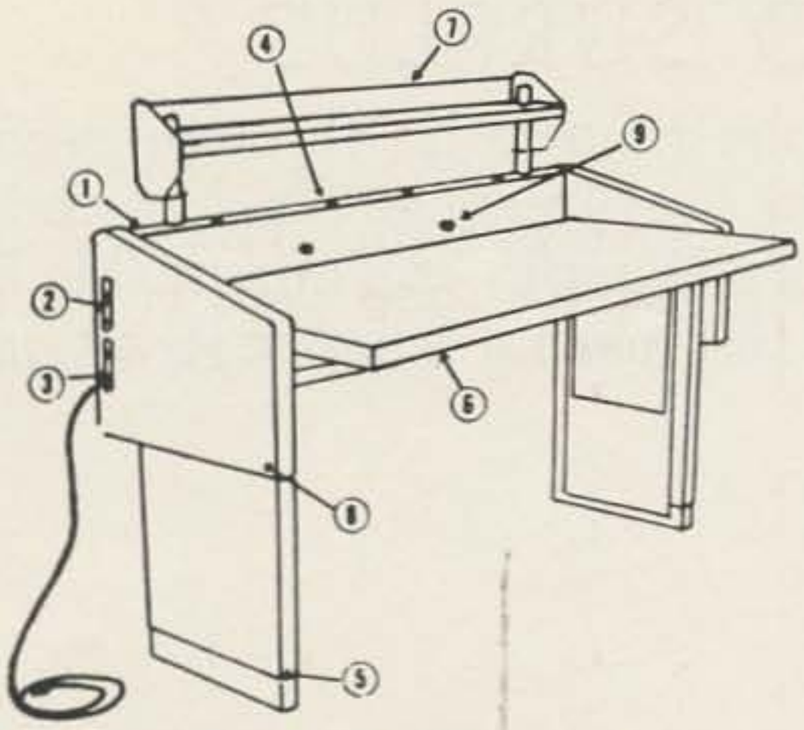

DELUXE STATION FACILITY . . . complete with formica top, vinyl trimmed ends, shelf and all electrical and mechanical features listed above. Approx. shipping weight 190 lbs. F.O.B. BROCKTON, MASS.
Part number 5203-2DSFA AMATEUR NET only $139.95.
STANDARD STATION FACILITY OR WORK BENCH . . . complete with standard steel ends, masonite top, and all applicable features as described above. Approx. shipping weight 160 lbs. F.O.B. BROCKTON, MASS.
Part number 5203-2SSFA AMATEUR NET only $99.95.
Order direct from factory or write to customer department for additional information.

ALDEN PRODUCTS COMPANY
5186 N. MAIN ST., BROCKTON, MASS.

OUTSTANDING FEATURES—

1. UNIQUE power channel safely encloses all interconnecting wiring, relays, etc. Eliminates "rat's-nest" behind equipment. Room for built-in power supply, filter network, etc.
2. CONVENIENT "big switch" with indicating fuseholder and neon pilot light—additional individually controlled and fused circuit switches may be added.
3. THREE wire detachable line cord brings in all power—insures proper grounding.
4. POWER channel has eight 110-volt outlets—4 above top and 4 below top—with grounding contact—eliminates makeshift outlet strips or adapters.
5. COMFORTABLE operating position—legs are adjustable to suit your individual needs—casters may be added for portability.
6. MASSIVE 1¾" thick top 26" x 60" provides ample room for transmitter, receiver, VFO, amplifier, etc. Deluxe top is white formica—standard is masonite.
7. ADJUSTABLE shelf, standard on deluxe model, holds test, monitoring or other equipment convenient to operator.
8. END panel covers removable—provide additional storage area for tools, tubes, etc.
9. DELUXE model equipped with 3 SO-239 RF antenna lead connectors.
10. EASILY assembled with ½" wrench and screwdriver—all screws removable with coin.
11. PLEASING appearance will appeal to XYL. Deluxe—two tone gray—gleaming white formica top—vinyl trimmed ends. Standard—gray with brown masonite top.
12. HEAVY gauge bonderized steel construction with baked enamel finish will last a lifetime.

73 Books

HAM-TV

This is the only book ever printed on the subject. It covers the subject like a blanket and tells far more than you could ever get from magazine articles and handbooks. It shows you how to put together a simple station for under $50 which will put you on the air on Ham-TV. $3.00

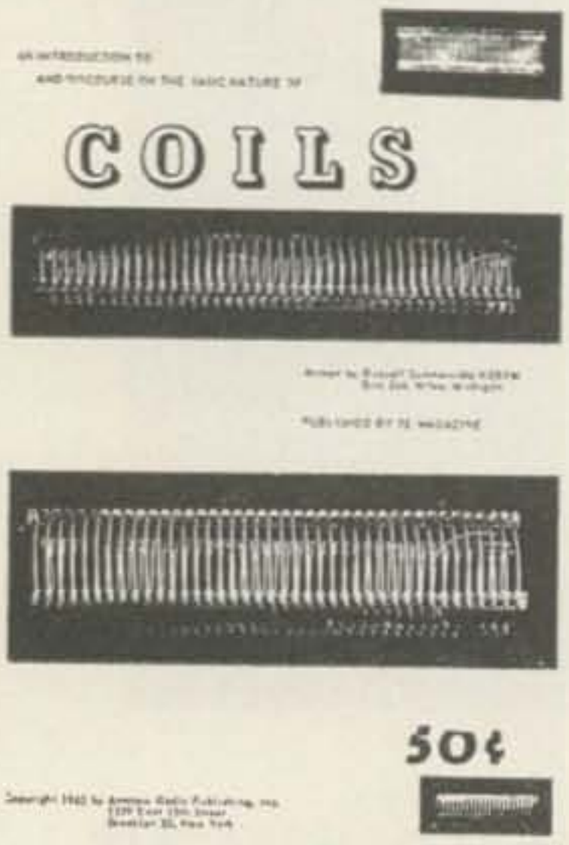

COILS

This is a thorough examination of all types of coils, far more complete and illustrated than any handbook or textbook. Well written and interesting. Quite a book. 50¢

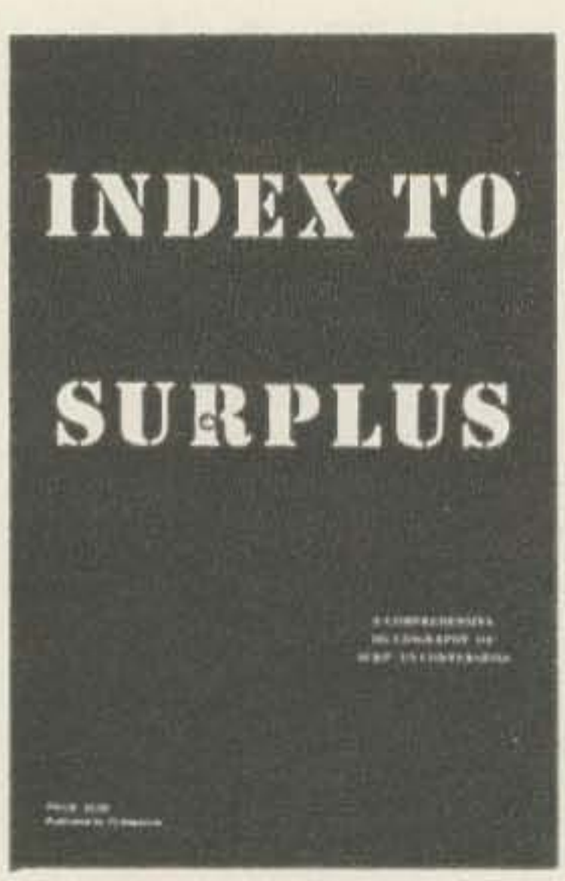

INDEX TO SURPLUS

W4WKM took the time to go through every radio magazine and list every article ever printed on the conversion of surplus radio equipment. He lists not only the source, but gives a short description of the conversion. $1.50

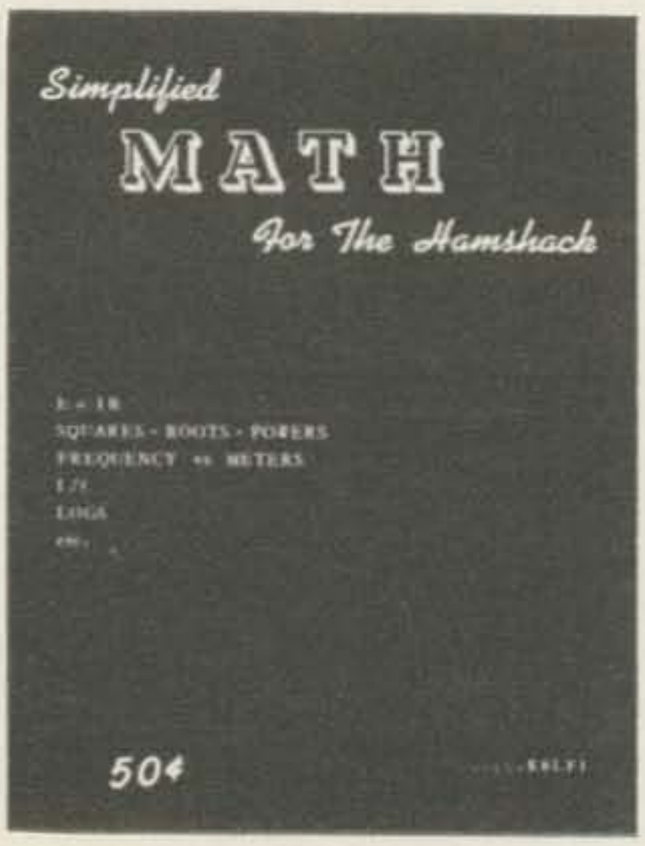

MATH

The most amazingly simple process for really understanding the math that is needed for working with radio. Ohms Law; squares, roots and powers; frequency/meters; L/C; logs; slide rules; etc. 50¢

73, Peterborough, N. H.

ably effective in suppressing "monkey chatter" by setting the notch just inside the high or low edge of the passband. This has the effect of narrowing the receiver passband, which under conditions frequently encountered, can make the difference between "getting the message through" or having to give the whole thing up in disgust.

A Q-notch Model 340-PT ($44.95 net) has recently been made available for transceivers associated with a separate PTO for separate receive and transmit frequency control of the KWM-2. No Q-notch is presently available for the KWM-2A equipment equipped with extra crystals for Mars and other frequencies as Collins has used the rejection tuning control mounting hole in these models.

You'll like this Waters Q-notch. It performs beautifully and looks good. It certainly will enhance the value of your current equipment.

. . . K2CM

WOW!
WHAT A MERRY XMAS!

Gift wrapped too, yet! Why not?

Special Xmas Bargain Package

Ham-TV by WϕKYQ ($3.00)
Index to Surplus by W4WKM ($1.50)
Math for the Hamshack by K8LFI (50¢)
Coils by K8BYN (50¢)
Mickey Miker by WϕOPA (50¢)

Complete set: $5.00

73 Peterborough, N. H.

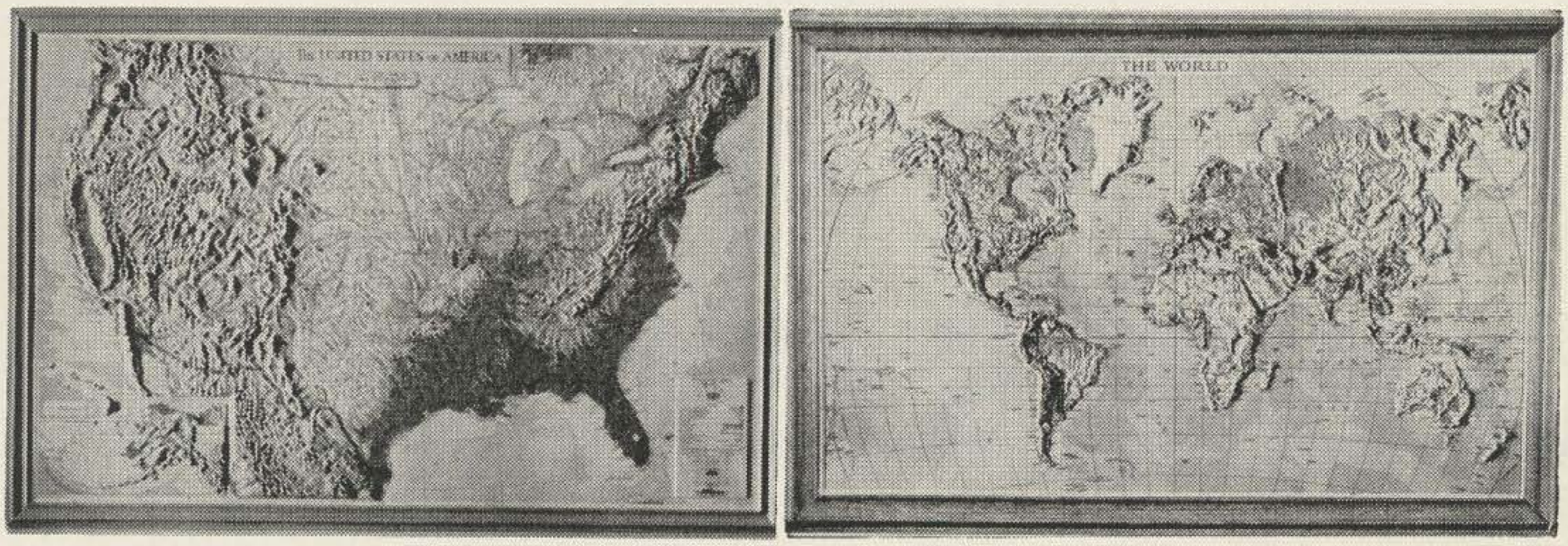

SANDY CLAWS

would give you one of these if he could make 'em, but it takes huge machines to crank these precision moulded gems out. Give one to the XYL for Xmas, be a Dandy Sandy. Give one to the Jr op so he can put it up on your shack wall. But when you give it you don't have to let on about the free one year subscription to 73 (or extension) that we're sending. Now, about these maps . . . they're 28½" x 18½" and the mountains stick right up at you, all in the right places. This is not one of those cheap crumby maps either, it is an expensive uncrumby one with eight colors, all different. Send.

Sir:
Enclosed is $9.95. Please send me one of your 3-D maps immediately. U.S.— World—
Name .....Call .....
Address .....
City .....Zone ....State .....

Please include at no charge with this order a one year (new) (renew) subscription to 73 starting with the .....issue. (Two years with two maps.)
Send order to: 73 Magazine, Peterborough, New Hampshire.

SUBSCRIBE!

name call

address (QTH)

city zone state

☐ $3.50 one year ☐ $40 LIFE

☐ $6.50 two years ☐ Renewal

☐ $9.00 three years ☐ New subscription

Start with: current issue ☐ next issue ☐

73 Magazine PETERBOROUGH, NEW HAMPSHIRE

name call

address (QTH)

city zone state

☐ $3.50 one year ☐ $40 LIFE

☐ $6.50 two years ☐ Renewal

☐ $9.00 three years ☐ New subscription

Start with: current issue ☐ next issue ☐

73 Magazine PETERBOROUGH, NEW HAMPSHIRE

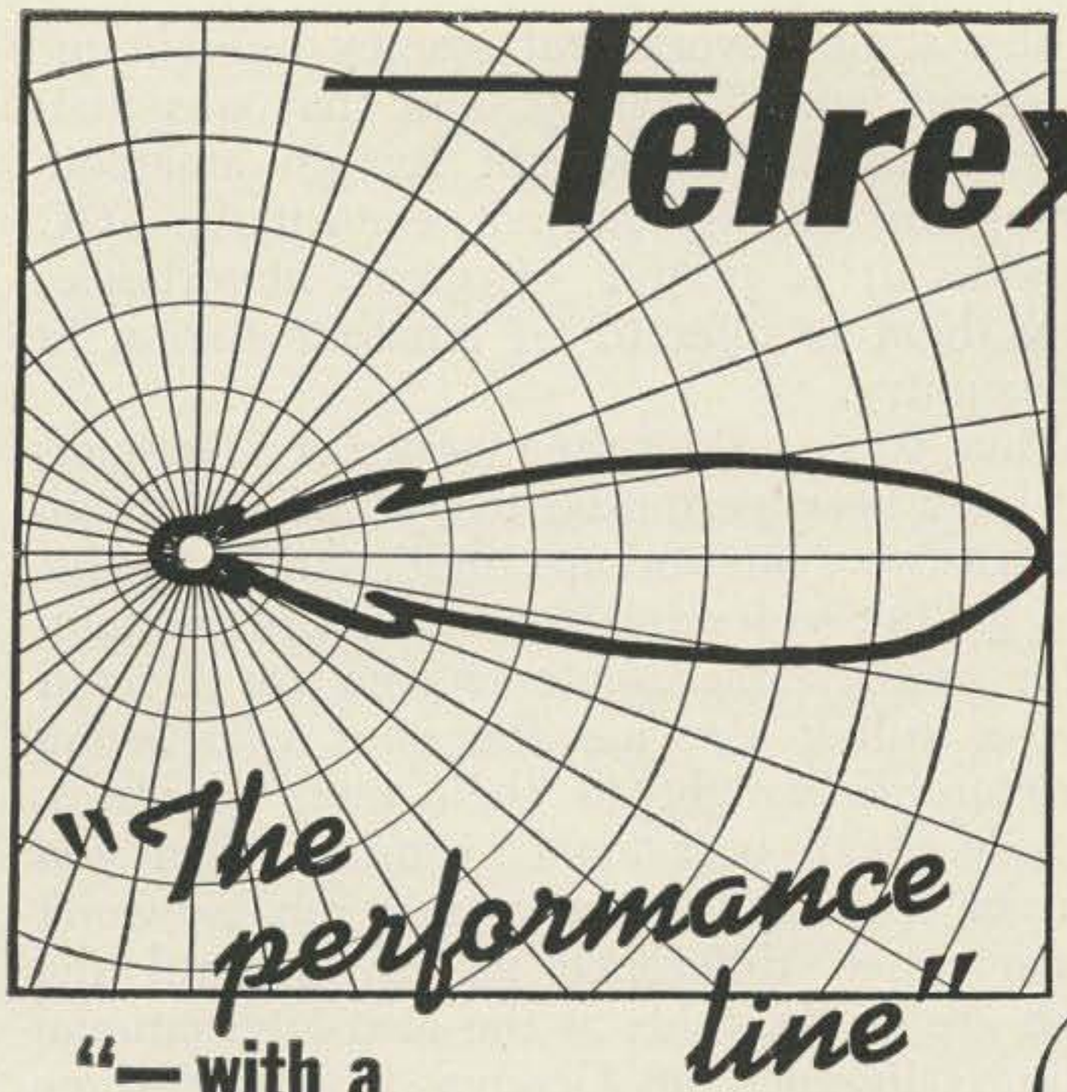

"— with a MATERIAL DIFFERENCE!"

"BEAMED-POWER" ANTENNAS and ANTENNA SYSTEMS

The Choice of the Discriminating Communication Engineer . . . the Man who Never Settles for Anything Less than THE-VERY-BEST!

You too — can enjoy World renowned Telrex performance and value!
Send for PL77 condensed data and pricing catalog, describes 107 popular amateur antennas from $6.95 to $999.00. Expanded data sheets — Your favorite band, also available.

ANTENNAS SINCE 1921 — Communication and TV Antennas

Telrex LABORATORIES

ASBURY PARK 40, NEW JERSEY, U.S.A.

New Products

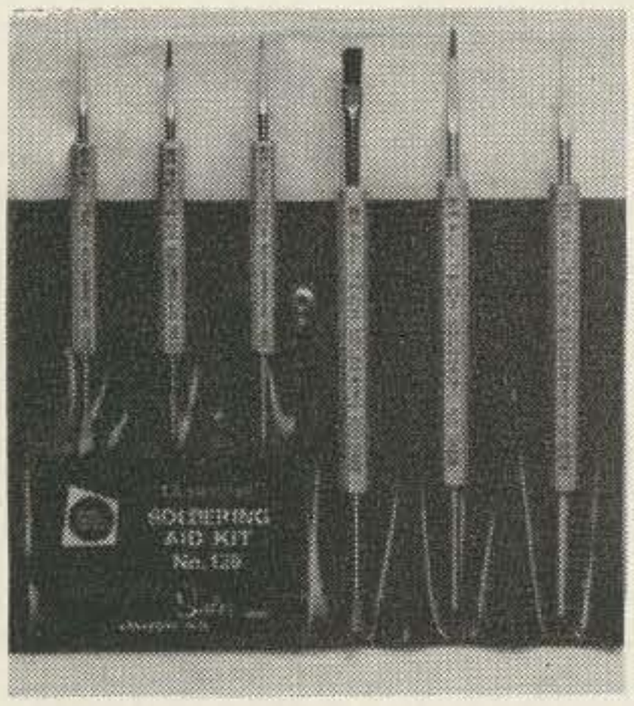

Soldering Tools

Time was when a soldering iron was considered the tool necessary for soldering. Beau-Tech Tools has a complete kit of tools out (for $4.87) for soldering, none of which is an iron. Little gadgets like scrapers, reamers, forks and brushes. Gad! Made of varnished maple and spring steel (much better than fall or winter steel). See your dealer.

Supreme Towers, Etc.

Are you still struggling with dipoles and verticals? There is nothing like swinging a beam from forty feet or so since antenna height is one of the most important factors in getting out a potent signal. Supreme has a fine catalog out on their line of 40 and 60 foot crank-up towers which start at $119! Write Supreme Electronics, Front & Main, Upland, Pennsylvania. You might also ask for a little info on their new six meter SSB transmitter if you're VHF'ly inclined.

THE CHATTERBOX!!!

ALL TRANSISTORIZED SPEECH CLIPPER-FILTER

Maintain Full Modulation—Multiply Audio "Punch"

- Rugged P.C. Board
- Not a Kit—Ready To Use
- No Modification To Xmitter.
- Self Powered— Batteries Incl.
- Shaped Audio Response
- High Q Toroid Filter
- True Clipper, Not Compressor

Phone Plug and Jack Standard—Other Types Available

C-Y ELECTRONICS
3810 E. 365th Street
WILLOUGHBY, OHIO

$24.95 Postpaid
Ohio Res. Add 3%
Send For Free Flyer

BACK ISSUES

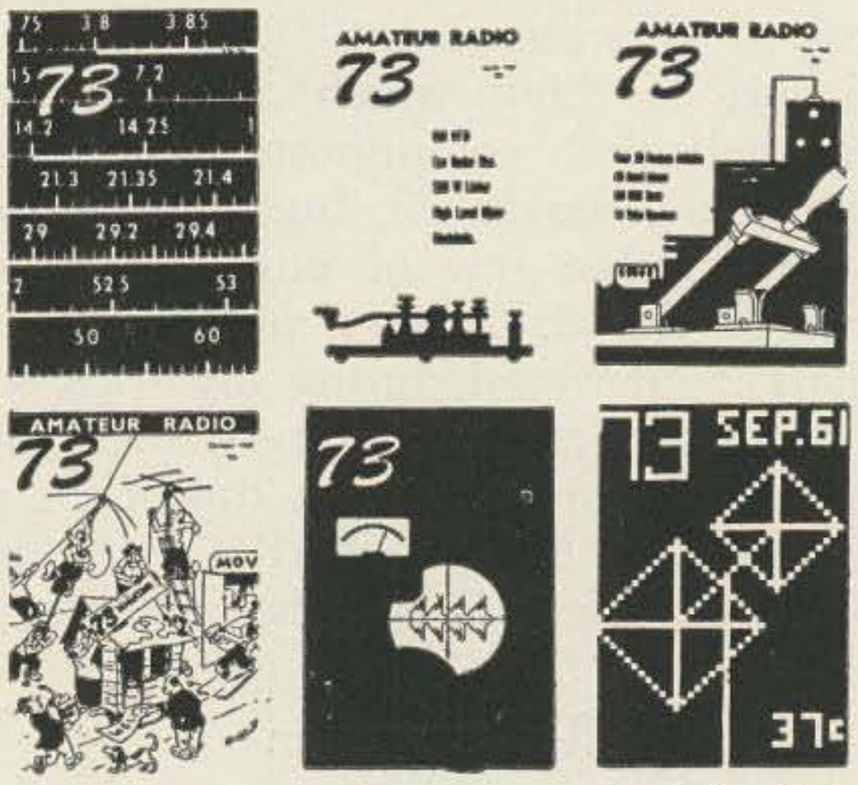

We have a diminishing stock of all back issues except January 1961. We are willing to part with this stock for only 50¢ each. How about that!
73 Peterborough, N. H.

(W2NSD from page 4)

W6RNC is still turning out junk mail from his hot little mimeograph and the pity of it is that every now and then he finds a sucker to reprint some of his garbage in a ham club bulletin.

Look fellows, if the editor of your club paper lives in such a vacuum that he doesn't know what the ACARN is really all about then please give him the word. This supposedly extreme rightist group (one man) is using the time tested communist technique of waving the flag and calling everyone who objects to him a communist or a pinko. I don't know if this joker is a communist, but he certainly is following their line.

The basic "idea" espoused by W6RNC is that we should use ham radio to broadcast U. S. nationalism, including twice daily playing of the NATIONAL ANTHEM by every American station. This is supposed to counter the expansion of communism. What fantastic stupidity! The FCC and every responsible thinking amateur is on this guys neck. He will shut up when everyone ignores him. Explain to your club paper editors.

One of the latest blasts was at the International Ham Hop Club, which RNC called pinko. Balderdash. First of all the IHHC has virtually no organization other than a couple of fellows who coordinate the desires of fellows to put up visiting hams with the desires of traveling hams to visit hams in other countries. The only political piece that they have ever put out in their little bulletin was one which I suspect makes RNC furious. . . . It was a list of the popular complaints about the United States which you might face during a trip through Europe and good logical explanations to answer these questions. The paper was very well done and gave well thought out answers to all sorts of anti-U. S. gripes. This is the sort of thing which obviously would enrage dedicated communists. I considered printing the piece in 73, but decided not to on the basis that few of our readers would be able to use it. I have met many of the questions it answered during my trips to Europe, but haven't run into them over the air.

Watch for my name on the top of the pinko or red list from RNC (ACARN) next month . . . hi! That's the only way he can fight facts.

Reciprocation

Well, Congress adjourned without considering our Reciprocation Bill, thus limboing it with all other unenacted proposed legislation. What happened? Apparently somewhere along the line some government agency brought up the dread word "security" and that was that. This means that important foreign amateurs visiting this country can not, even if the FCC considers it a matter of great importance, allow them to operate an amateur station in this country.

When you consider the number of Americans that have been permitted to operate in foreign countries you can perhaps understand why this is so galling to foreign amateurs. Unfortunately for us the same amateurs who are effected by this ruling also are the ones who swing considerable weight in their own countries. Outside of an occasional grumble when you work or visit a DX operator you probably won't notice much difference in things until the cards are on the table at the next international radio conference at Geneva in about three years. At that time we will be wanting the entire world to support the largely American hobby of ham radio by sacrificing the frequencies that they feel they badly need for commercial and government purposes so we can continue to have a good time. We almost got our ears pinned back in 1959. Our "friends" were after our scalp and guess who pulled our chestnuts out of the fire . . . the U.S.S.R.! Is it likely to happen again? No.

Why no reciprocation legislation? Apathy.

It is unfortunate that we have fellows that are quite dedicated to undermining our hobby and no one, apparently, dedicated to its survival.

RM-341

A petition was sent in to the FCC requesting the expansion of the twenty meter phone band down to 14,150 kc. After only a short deliberation this petition was rejected. We have much to learn from this action. In this case there were many factors which made consideration of the actual request almost impossible. The petition itself was wandering and vague. It went on and on with non-pertinent rambling, complete with a bitter attack on the A.R.R.L. Publication of the petition as submitted would have put the FCC in the position of publishing a long harangue against the A.R.R.L. Now, no matter what the feelings of the men at the FCC, they certainly can't do that.

The petitioner proceeded to put undue pressure on the FCC for action on his petition, rather than waiting for them to take action on their own. He circulated his petition and got it printed in several ham club bulletins whose editors didn't mind the anti-ARRL nature of the text. He pressured on the air, wrote letters,

etc. If only we had had someone as dedicated working for the reciprocal licensing bill!

The ARRL, according to the November issue, page 61, is looking into expulsion of the petitioner from the ARRL.

The FCC had several other problems with this same chap, and these might have influenced them negatively. There were numerous reports of TVI in which he was uncooperative, complaints of overpower, complaints of excessively broad and splattering signal, complaints of malicious interference, and several other serious problems much too lengthy to cover here. Quite a few people seemed to suspect that the petition was submitted more for personal reasons than any interest in the hobby.

If there are adequate reasons for the twenty meter phone band being extended down 50 kc more, then I am sure that the FCC would welcome a reasonable petition requesting same.

How Long Has This Been Going On?

A letter came the other day, sent to my Call Book address in New York, extolling the virtues of Rockefeller, complete with illustrated brochure, sent by four New York hams, including one lesser A.R.R.L. official. Since these fellows were, as I recall, the same chaps who conferred with one of Rockefeller's aides in the matter of getting the New York call letter license plates, it seems rather obvious that some sort of bargain was struck. That's the way politics works, I suppose. Are the New York lads in there with a new first, using ham radio for political ends, or have I just been out of touch?

Several religions have been using the ham bands for "discussions" with the idea of gathering more adherents. The anti-communists are going great guns with their nets (they say they are anti-communists, but everything they print sounds exactly as if it came directly over Radio Moscow), perhaps we will soon see Democratic nets, Republican nets, and Vegetarian nets. I'll be watching the Operating News column in QST for further developments. Anybody for a Porsche Net? Or how about a Ham Radio Net for the few of us who are interested in that?

National NCX-3

Our proximity to Boston and the National Company plus the understandable pride in a startling new product brought Mike Ferber, W1GKX, the Equipment Sales Manager, up here on a Sunday to show off the new National Tri-Band NCX-3 Transceiver.

We looked it over, talked it over and then hooked it up and tried it out. I like trans-

FREE Catalog

OF THE WORLD'S FINEST ELECTRONIC GOV'T SURPLUS BARGAINS

HUNDREDS OF TOP QUALITY ITEMS—Receivers, Transmitters, Microphones, Inverters, Power Supplies, Meters, Phones, Antennas, Indicators, Filters, Transformers, Amplifiers, Headsets, Converters, Control Boxes, Dynamotors, Test Equipment, Motors, Blowers, Cable, Keyers, Chokes, Handsets, Switches, etc., etc. Send for Free Catalog—Dept. 73.

FAIR RADIO SALES
2133 ELIDA RD. • Box 1105 • LIMA, OHIO

COLUMBIA GEMS!

SPECIAL! 144 or 220 mc TRANSMITTER

20 watts! Simple to convert 242 mc DXT-2 Beacon Transmitter, measures 4" x 4" x 11" complete with antenna, water-tight case and sidetone modulator. Power required 300V DC & 6.3V. Uses two 12AT7 and one 6360 final (not furnished). Schematic and 2-meter conversion data included. Hundreds sold already at this fabulous price. BRAND NEW, only **6.95**

(See SB conversion Oct. '62 CQ)

COMMAND SET SPECIALS!

COMMAND RECEIVERS

190-550 kc Famous "Q-5er" Excellent Condition	12.95
550-1500 kc (Broadcast Band) NEW	29.95
1.5-3 mc NEW	14.95
6-9 mc Excellent	9.95
R-28 ARC-5 100-156 mc NEW	22.50

COMMAND TRANSMITTERS

2.1-3 mc NEW	5.95
3-4 mc Excellent	6.95
4-5.3 mc NEW	5.95
5.3-7 mc Excellent	4.95

Send for Columbia's New 48-Page Catalog of Surplus Electronic Bargains!

Name..... Call.....

QTH .....

City..... Zone..... State.....

COLUMBIA ELECTRONICS
4365 WEST PICO BLVD. LOS ANGELES 19, CALIF.

ceivers. We had the thing on the air and in a QSO inside of one minute. All we did was connect the power supply/speaker unit to the transceiver, plug it in the wall, screw on the antenna, plug in the mike and we were on the air.

There wasn't any point in trying to set up a big lab test at this time since we were interested in getting reports from some critical operators and getting the feel of the transceiver. The reports on both 20 and 75 were completely complimentary . . . we were putting out a clean, strong signal and voice quality was fine. We tuned 40, but didn't try to make a contact there. The receiver tuned nicely, having plenty of bandspread and a solid feel to the nice large knob. At $369 for a three band transceiver I suspect that National will sell an awful lot of these.

Judging from the large number of transceivers that will be on the market by next spring, the manufacturers are intent on satisfying the pent up demand for sideband transceivers for mobile and home use. The day may not be far away when most of us are using transceivers instead of the old receiver-transmitter combinations.

What About CD?

Though the odds are overwhelmingly against any possibility of war, the recent Cuban affair got a lot of fellows thinking about CD and the part that ham radio would play should something happen. It is always better to consider alternatives before an emergency rather than wait until the emergency presents itself and sound consideration is impossible with temporary expediency becoming the rule.

At the outbreak of the last war we were promptly thrown off the air. This freed equipment and frequencies for military use. (My old SX-24 went to Brasil with the Rubber Development Commission, a government outfit that spent millions of dollars to try to grow rubber in Brasil and never sent back a rubber band. The 2½ meter band was turned over to the SD radar, a unit that was planned as an anti-aircraft radar, but which turned out to be a wonderful homing beacon for aircraft looking for submarines).

It seems likely that in the event of another war our government, if they have time for such an action, would again institute a complete ham radio blackout. Of course, if the next war takes the course that we think probable, we may find our telephone, telegraph and power systems all disintegrated . . . which would essentially leave us governmentless. Without communications you don't have any government. Our country could conceivably be held together by amateur radio. What else have we got?

Pursuing this thought a bit, it seems to me that there should be some encouragement above and beyond Field Day for the establishment of independent power for our stations. It might also be a good idea to acquaint amateurs with cyphering techniques. There are several fairly simple but effective systems which we could experiment with were it not for the FCC regulations prohibiting this. Perhaps it is time for someone to petition the FCC to permit encyphered transmissions on, say, two meters, where our Technicians could get a chance to play around.

Club Notes

A letter from K7RPT of North Bend, Oregon, suggests that we follow up the article on page 50 of the October issue of 73 wherein it is suggested that clubs have a local net by the establishment of a sort of national net frequency. I have been sort of tinkering with this idea myself. RPT suggests that we standardize on 29.2 mc since this is fourth harmonic of the popular surplus 7300 kc crystals. I've checked with a couple of crystal manufacturers and find that we can get a good supply of crystals all on the same channel quite reasonably. With a little encouragement we might see what we could do about this.

It seemed to me that it might be nice to establish channels on all amateur bands for members of the Institute of Amateur Radio to congregate . . . sort of calling frequencies. The number 73 somehow seems to wander through the suggested frequencies. Like 145.73 mc, 50.73 mc, 21.373 mc, 14.273 mc, 7173, 3973, etc. And thoughts on this?

ARC-2

Several fellows have written in to tell us how much fun they are getting from their ARC-2's which they converted per our article in the October 1962 issue. They seem to be available from Columbia, JJ Glass, Fair and Bill Slep. The parts list for Fig. 3 was not complete and the following might be helpful. T1-117vac/24v 4A Stancor P-6378 or equal. CR-1-CR4 silicon diode 400v PIV 500 made Sarkes-Tarzian M-500 or equal. CR-5-CR-8 silicon diode 50v PIV, 3A dc if autotune *not* desired or 6A dc if desired, available from TAB for 50¢ 3A or $1.50 for the 6A. J401 is ex-dynamotor connector and P101 is main power connector. We are working on a booklet on the ARC-2 which should be available in a few weeks. It will sell for $1.

Saddle Stitching

Some of the letters ask when we are going to change from a saddle stitch binding to the flat back binding used by CQ and QST. Well, I really hadn't planned on changing. We could save quite a bit each month if we went to this less expensive binding, but it seemed to me that saddle stitching was better since it allows you to lay the magazine flat for reading and for building from the articles. Did you ever try to flatten out a copy of QST and lay it on the workbench? There are several of the larger magazines that use saddle stitching, including the New Yorker and Playboy. Unless you have some reason for wanting us to change we'll stick with saddle stitching.

WϕRQF Improvement

The schematic on page 90 of the March '62 issue of 73 was pretty good, but not perfect. RQF points out that the one meg resistor in the plate of V2 should be moved to the right one connection so the NE-51 won't have plus 300v on it. If you are going to do any RTTY converter building you had better go back and mark that diagram right now.

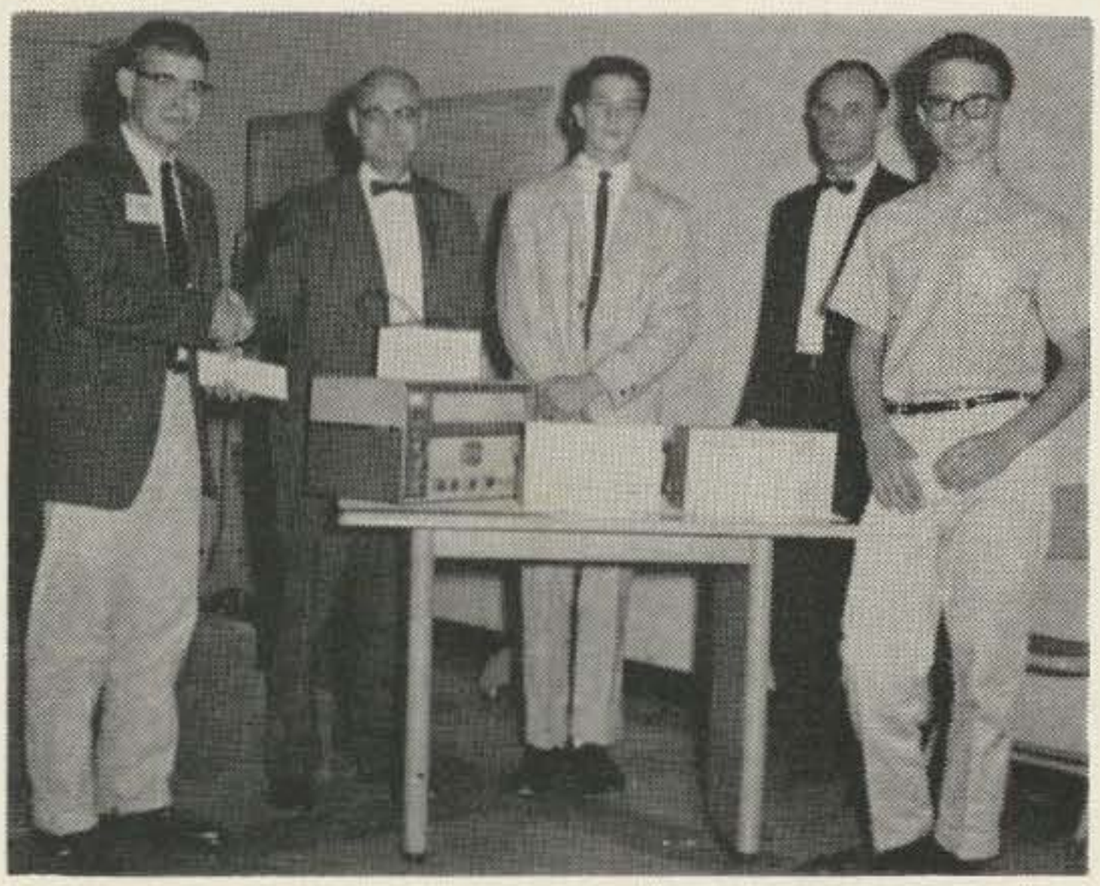

Prize Winners

The Rock Creek Amateur Radio Association (Washington, D. C.), W3RE President, has taken a long step forward in this day and age of kit building and 100% commercial gear stations. They have instituted a yearly set of awards for the best home built equipment by beginners licensed less than one year. The winners this year were Donald Campbell KN3RAZ, Larry Rubin KN3STB and James Henkel KN3TIV, all of Maryland. Left to right in the photograph are KN3RAZ, Robbie W3RE, KN3TIV, Joe W3PIH (contest chairman) and KN3STB.

Say You Want A Deal?

ON A NEW

HX-50, HQ-110A, HQ-170A, HQ-180XE
DRAKE 2-B INVADER RANGER II
TA-33 HAM-M ... ETC.

YOUR TRADE-IN AND A FEW BUCKS IS ALL IT TAKES

WRITE OR CALL "FRANK" AT
LADD ELECTRONICS
111 NO. 41 ST. OMAHA 31, NEBR.
PHONE - 402 - 556 - 3023

TTY GOODIES

BOEHME TTY RECEIVING UNIT, AM103BU new in crates w/spares and manuals	$22.50
MANUAL ONLY FOR AM103BU (above)	1.00
WEST. ELEC. TTY REC. UNIT, CW50124 new in crates, less tubes	19.95
TUBE KIT, Manuals & Spares for above	7.50
MANUAL ONLY FOR CW50124 (above)	1.00
POLAR RELAYS, TYPE-D164816, new in Ctn. Similar to but smaller and more flexible than the 255A. Has 3 windings. Can be used in plate circuit (write for free diagram)	1.95
AMPHENOL 9-pin socket for above relay	.25
REPLACEMENT ARMATURE Coil for above	.50

KEYS & CW ITEMS

J-37 KEYS, USED—AS THEY COME	1.00
NAVY KEY, NEW, CJB26003A (worth 5 times our price)—THE REAL McCOY	2.95
DOW KEYMUNICATOR, new, while they last	4.95
TG5B TELEGRAPH SET, new, complete with headphone, key and carrying case in overseas pack	9.95

New AN Meters & Ind.

0-8 VAC 3½" R	$3.95	I-82A, Ind., new	$3.95
0-10 VAC 2½" R	3.95	I-81A, Ind., new	2.95
0-150 VAC 3½" R	3.95	50°C Thermostat	2.95
0-250 VAC 4½" R	4.95	0-1 MADC 2½" R	3.95
200-0-200 VDC	3.95	0-15 MA 2½" R	3.95
0-300 VDC 2½" R	3.95	0-20 MA 2½" R	3.95
0-50 MMA 2½" R	6.95	0-30 MA 2½" R	3.95
0.200 MMA 3½" S	4.95	0-35 MA 2½" R	3.95
0.500 MMA 3½" R	4.95	0-100 MA 2½" R	3.95

RADIO ZONE MAP OF THE UNITED STATES
GET YOUR FREE COPY...

Ladd ELECTRONICS COMPANY

REQUEST IT WITH YOUR NEXT ORDER OR INQUIRY TO:—
LADD ELECTRONICS
111 No. 41 ST., OMAHA 31, NEBR.

R–45/ARR–7

Receiver Modifications

James M. Stueber W5UOZ-AF5UOZ
8410 Flower Place N.E.
Albuquerque, N. M.

THE R-45/ARR-7 receiver is a continuous tuning type covering the range of .55 mc thru 42 mc. It is a single conversion superhetrodyne circuit, with two tuned rf stages and one untuned preselector rf stage. The design is a modification of the well known Hallicrafters SX-28 receiver. The particular modified receiver was built under a Signal Corps contract by the Belmont Radio Corp.

Inclusion of the described changes will provide the user with a good communications receiver, overcoming the major disadvantage in the original design, which is the lack of bandspread tuning.

A schematic of the receiver and a coil layout for alignment purposes is included for those who may require them.

Appreciation is extended to Mr. Amos Peters, AF5LHX, for supplying the receiver through the MARS Central Technical Net, thereby making these modifications possible.

The changes described consist of the following:

1. Addition of bandspread tuning and dial
2. Addition of necessary wiring to provide ac power supply operation
3. Addition of Send-Rcv. Switch
4. Improvement of "S" meter circuit
5. Audio amplifier modification for speaker connection
6. Low impedance antenna input stage

Bandspread Tuning and Modification for ac Power

1. Remove the screws holding the cover plate which houses the tuning dial motor reversing switch and stop mechanism. Discard.
2. Cut the wires from the motor reversing switch SW3 and remove the switch.
3. Remove the stop mechanism from the main tuning dial shaft and discard.
4. Remove all the knobs from the receiver and the screws from the power connector so the front panel may be taken off.
5. Remove the main tuning dial by loosening the allen-head screws.
6. Remove the cover from the cast aluminum housing containing the 28V dc motor and associated parts.
7. Remove the filter, motor and misc. parts from inside the box.
8. Remove the fiber gear from the vertical shaft.

This may be sealed with paint and may be difficult to loosen, but with the proper size allen wrench and solvent to loosen the paint, it will come loose.

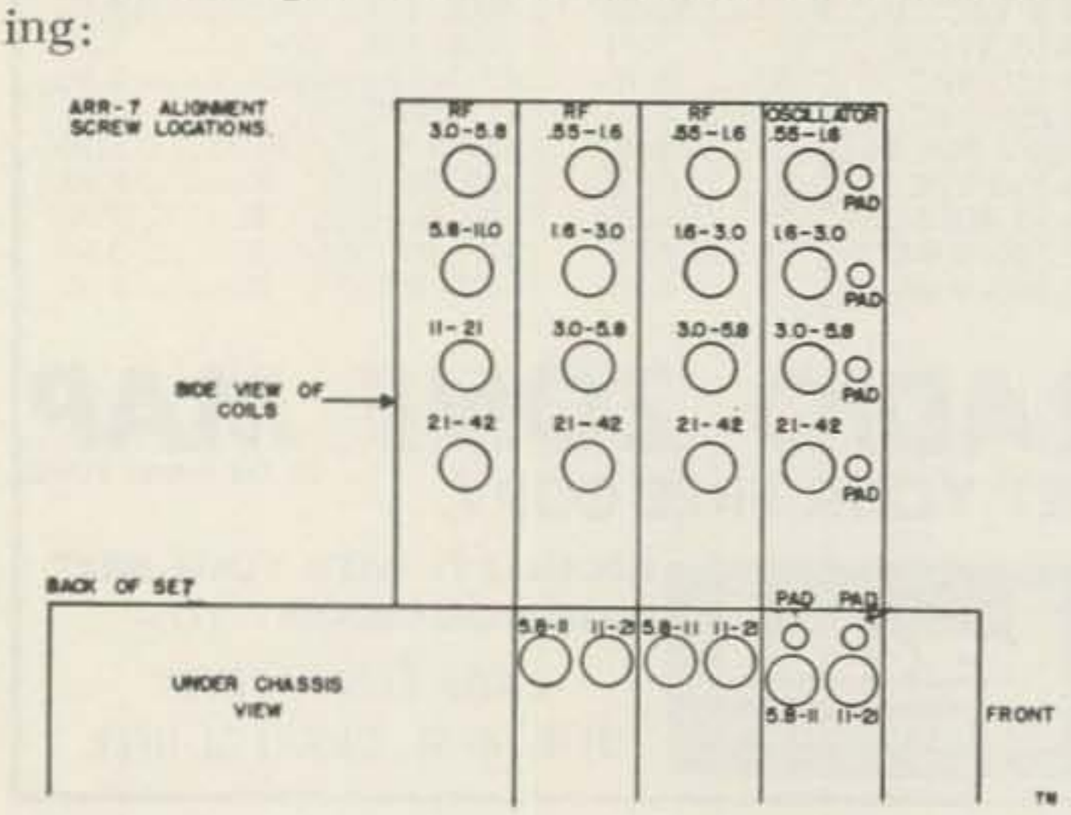

Meshna's Astoundments

TELETYPE PRINTER PAPER, rolls, 8½ inch wide ..... 2/$1.00
TELETYPE PERFORATING PAPER, case 40 rolls 5.00
ARC-5 TRANSMITTER, 80 meters, 3-4 mc.. 8.50
MD-7 MODULATOR, brand new 8.50
IBM MEMORY PLANE, 8,000 bit storage.... 15.00
COAX SWITCH, Thompson, new, 115 volt AC 60 cycle 12.50
SOLAR CELL BANK KIT, 5 cells, with instructions 1.50
OSCILLATOR TRANSISTORS, same as PHILCO SB-100 ..... 2/3.00
RESISTOR ASSORTMENT, marked ½ watt, carbon 100 ..... 1.00
28 VOLT 4 AMP DC SUPPLY, unused surplus, input 115 v. 60 cycle 12.50

MICROAMETER, dual 150 microamp movement, used in teletype operation as signal meter w/instruc. $1.95
COLLINS ARC-12 TRANSCEIVER 220-400 mc 22.50
1,000.000 KC CRYSTAL, HC-6 holder..... 2.00
220 MC DIPOLE ANT. BRAND NEW..... 3.00
NICAD BTRY 1.2 volt, 4 amp hour..... 1.95
DISC CERAMIC COND. bag of approx. 100 1.00

TD-2

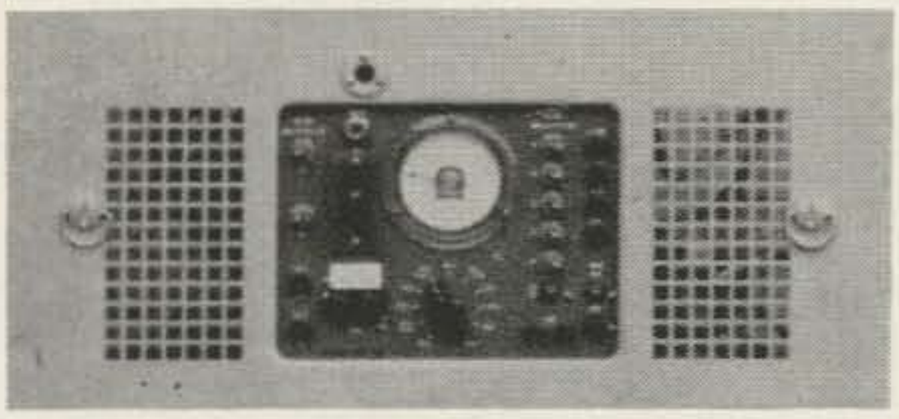

L M FREQUENCY METER

with book, OK, **$49.00**

TD-2 MICROWAVE GENERATOR with WE 416B, 2C43, etc. Complete as shown, output of 3700-4200 mc. Elaborate transmitter used by WE for microwave transmission. Frequency multiplier stages may be tapped for lower output frequencies, makes nice stable pump source for parametric amp., lab signal source, etc. $40.00
With extra amplifier stage and tube 50.00

NEW CATALOG #62-W1 just out. Send one thin dime for handling charge.

All material FOB Lynn, Mass.

JOHN MESHNA JR., 19 ALLERTON ST., LYNN, MASS. (617) LYnn 5-2275

K T V

We spent our years advertising budget in October, so look back on pages 40 and 41 of the October 1962 issue of 73 and see what we have. You'll find complete prices and ordering information there.

KTV TOWERS, SULLIVAN, ILLINOIS

9. Remove the potentiometer R41 and bracket, located on the top rear of the chassis. Cut the wire leads free near the potentiometer terminals and leave them in position.
10. Remove the wires from the POWER switch, tie together, solder and insulate.
11. Remove the white wire with blue and orange tracer from the MOTOR switch.
12. Remove the ground connections from pins A and C of receptacle SO-1.
13. Attach the white wire, with blue and orange tracer, which was removed from the MOTOR switch, to one lug of the POWER switch.
14. Attach the other end of the wire which was attached to the motor, to pin C of SO-1 connector.
15. Cut the white wire with green tracer from the MOTOR switch and attach to the other lug of the POWER switch. Pins C and D of SO-1 now become the ac switch-wires to turn ac power off and on.

The bandspread tuning knob will project out of the top of the case, since there is no front panel space available.

16. A three-eighths inch hole is drilled in the top of the cast aluminum motor housing located 11/16 inch from the front of the case, and ¼ inch from the left. A shaft bushing is installed in this hole to accommodate a length of ¼ inch diameter shaft and solid shaft coupling. The bandspread tuning will be engaged by throwing the MOTOR switch to ON, which engages the electric clutch in the tuning mechanism. When fast tuning is desired, the MOTOR switch is thrown to OFF and tuning is accomplished with the TUNING knob.

Parts are now installed to provide dc voltage to energize the clutch.

17. Mount a 6.3 volt 1.2 amp. filament transformer under the chassis on the side lip near the SO-1 connector. Refer to Fig. 1

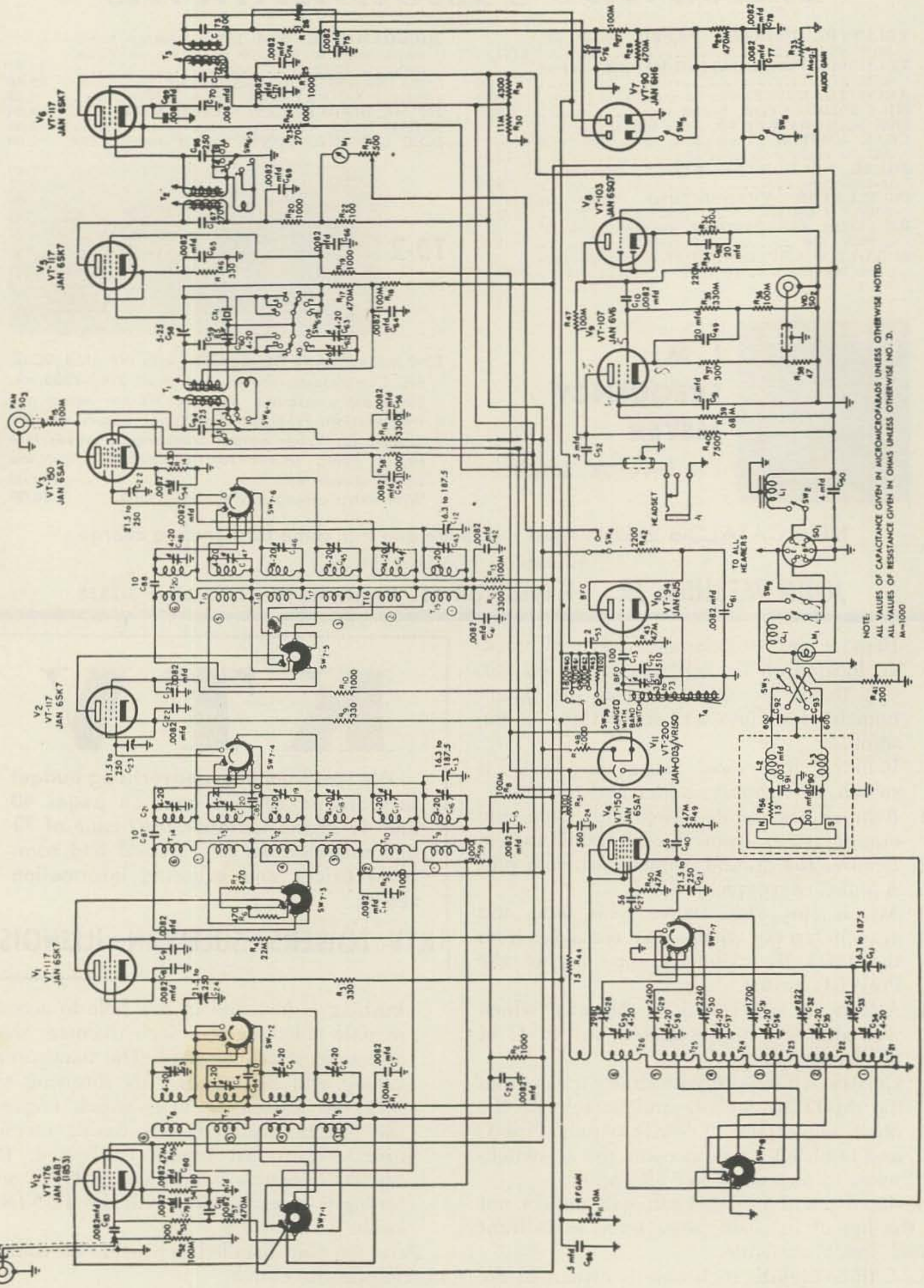
V6 VT-117 JAN 6SK7
V5 VT-117 JAN 6SK7
V4 VT-117 JAN 6SK7
V3 VT-150 JAN 6SA7
V2 VT-117 JAN 6SK7
V1 VT-117 JAN 6SK7
V12 VT-176 JAN 6AB7 (1853)
V7 VT-90 JAN 6H6
V8 VT-103 JAN 6SQ7
V9 VT-107 JAN 6V6
V10 VT-94 JAN 6J5
V11 VT-200 JAN-003/VR150
V4 VT-150 JAN 6SA7
SW7-1
SW7-2
SW7-3
SW7-4
SW7-5
SW7-6
SW7-7
SW1
SW2
SW3
SW4
SW5
SW6
SW8
SW9
SW10
SW11
SW12
HEADSET
TO ALL HEATERS
AUDIO GAIN
ANT.
NOTE:
ALL VALUES OF CAPACITANCE GIVEN IN MICROMICROFARADS UNLESS OTHERWISE NOTED.
ALL VALUES OF RESISTANCE GIVEN IN OHMS UNLESS OTHERWISE NOTED. K=1000
M=1000

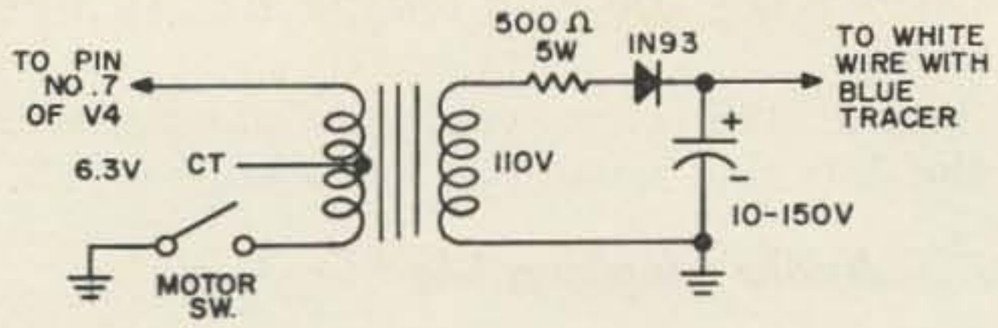

FIG. 1

for the schematic of this portion of the modification.

18. Connect one of the 6.3 volt leads of the transformer to pin 7 of 6SA7 tube V4.
19. The center tap connection of this winding is not used, so cut the lead off close to the transformer winding.
20. Remove the wire with blue tracer from the MOTOR switch.
21. Connect the other 6.3 volt lead to one contact on the MOTOR switch.
22. Connect the other switch contact to a convenient ground.
23. The 500 ohm 5 watt resistor, the 1N93 diode, and 10 mfd capacitor are conveniently located near the transformer on a three lug terminal strip and wired as shown in Fig. 1.
24. Connect the wire with blue tracer, which was removed from the MOTOR switch, to the junction of the 1N93 diode and the 10 mfd capacitor shown in Fig. 1.

Addition of SEND-RCV Switch

1. Drill two holes in the front panel which will accommodate a SEND-RCV switch and a pin jack (RCA Phono Jack) for a keying relay connection. Due to the close spacings and limited panel space available, care must be exercised in location of the two holes. A ½ inch hole for the SEND-RCV switch is located 5½ inches from the left and 1 13/16 up from the bottom. A three-eighths inch hole for the pin jack is drilled 6 inches from the left and 2 7/16 inches up from the bottom of the front panel. Refer to Fig. 2 for the schematic of the circuit.
2. Estimate the length of wire needed to go from pin A and B of SO-1 to the new SEND-RCV switch, a SPST toggle switch on the front panel, and install these leads. Do not solder these leads at the toggle switch at this time but solder at pin A

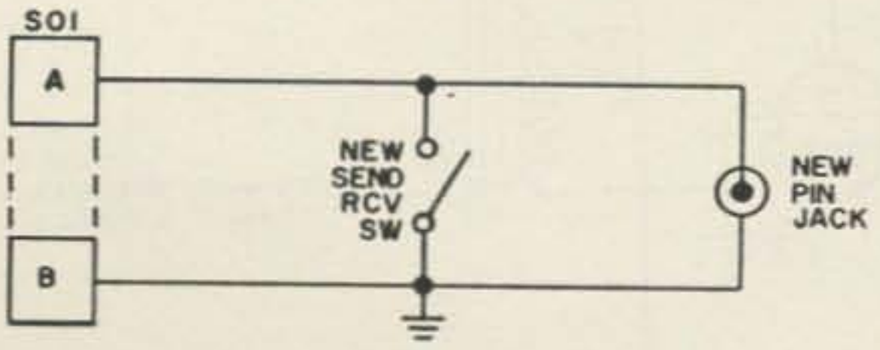

FIG. 2

ARC-3 and ART-13A TECH MANUALS!
Handbooks mainten., oper., theory, schem. dwgs, etc. Either book postpaid $10.00

RADIO RECEIVER AND/OR SPECTRUM ANALYZER
AN/APR-4 rcvr is the 11-tube 30 mc IF etc. for its plug-in tuning units; has S-meter, 60 cy pwr sply. Pan. Video & Audio outputs. AM. Checked, aligned. with heads for 38-1000 mc, pwr plug & Handbook, fob Los Ang. $164.00

Add $59.50 for 1-2.2 kmc; add $79.50 for Test Oscillator TS-47/APR, 40-3000 mc ±1%, CW, AM, PM, w/built-in 60 cy pwer sply, fob Los Ang. Add $45.00 to get AM/FM rcvr instead of AM.

2-METER RECEIVER & 2/6/10 METER XMTR
SCR-522 rcvr, xmtr, rack & case, exc. cond. 19 tubes include 832A's. 100-156 mc AM. Satisfaction grtd. Sold at less than the tube cost in surplus. Shpg wt 85 lbs. Fob Bremerton, Wash. Only $14.95
Add $3.00 for complete technical data group including original schematics & parts lists, IF, xtl formulas, instruct. for AC pwr sply, for rcvr continuous tuning, for xmtr 2-meter use, & for putting xmtr on 6 & 10 meters.

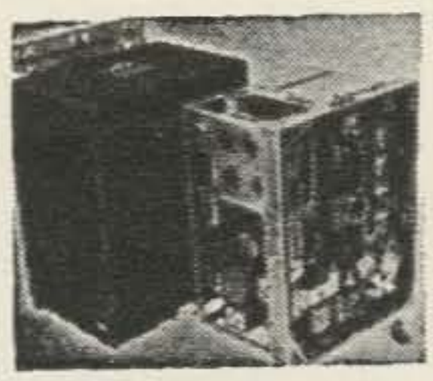

COMMUNICATIONS RECEIVER BARGAINS
BC453B: 190-550 kc 6-tube superhet w/85 kc IF's, ideal as long-wave rcvr, as tunable IF & as 2nd convert. W/all data. CHECKED ELECTRICALLY Grtd. OK! 11 lbs. fob Los Angeles $12.95
Same, in handsome cabinet w/pwr sply. spkr. etc., ready to use, is our QX-535, 19 lbs. $37.50
RBS: Navy's pride 2-20 mc 14-tube superhet has voice filter for low noise, ear-saving AGC, high sens. & select. IF is 1255 kc. Checked, aligned, w/pwr sply, cords, tech data, ready to use, fob Charleston, S. C. or Los Angeles $79.50
R-45/ARR-7 brand new, 12-tube superhet .55-43 mc in 6 bands, S-meter, 455 kc IF's, xtl filter, 6 sel. positions, etc. Hot and complete, it can be made still better by double-converting into the BC-453 or QX-535. Pwr sply includes DC for the automatic tuning motor. Fob San Antonio $179.50
Time Pay Plan: $17.95 down. 11 x $16.03

Write stating your specific needs in lab-type test equipment: Scopes, Signal Generators, freq. meters, etc., etc.

R. E. GOODHEART CO.
Box 1220-GC BEVERLY HILLS, CALIF.

Special Introductory Offer

SCR 522 Transceiver 2 meter or 2/6/10 on Trans. complete with tubes and 4 random crystals	L/N	$14.95
R4/ARR2 Versatile Receiver	New	$4.95
T61/AXT2 420 MC Transmitter	New	15.95
BC 929 Scope	New	10.95
ID59/APA11 Scope	L/N	14.95
ALA Scope (Same as IP48/APA11)	L/N	14.95
BC 375 Transmitter (less T. U.)	Exc.	12.95
T67/ARC3 Transmitter	Exc.	15.95
RM 52 Phone Patch	New	1.95
SA 325/U Coaxial Switch (See Aug. 73)	L/N	$12.95
RTTY SSB Etc.—etc. Versatile Multimatch Transformer	New	.79
BC 433 B/C Band Rec. (400 cycle)	Exc.	9.95
APS 13 420 MC Transceiver—chassis only—less tubes with conv. data		1.95
255A RTTY Polar Relay		2.95
APX 6 Transponder		14.95
T233/URW 3 6 Meter Transceiver—same as BC 1158	L/N	39.95
Ni-Cad Batteries 1.2V		1.75
Blower AC-DC 12 V to 65 V		2.95
MD 7 Modulator	New 7.95—Used	5.95
BC 458 (T21) 5-7 MC	New 7.95—Used	4.95
BC 457 (T20) 4-5.3 MC	New 7.95—Used	4.95
T 18 2-3 MC	New 7.95—Used	4.95
RG 54 Coax 58 Ohms	$9.95 per 380'	2.95 per 65'
BC 1206 200-400 KC Rec. Less Tubes		1.95

Tubes—Headsets—Mikes—Components
Dynamotors—Transformers
Send for Cat. #562.

ARROW SALES-CHICAGO, INC.
2534 S. MICHIGAN AVENUE
CHICAGO 16, ILLINOIS
CA 5-4750-4751

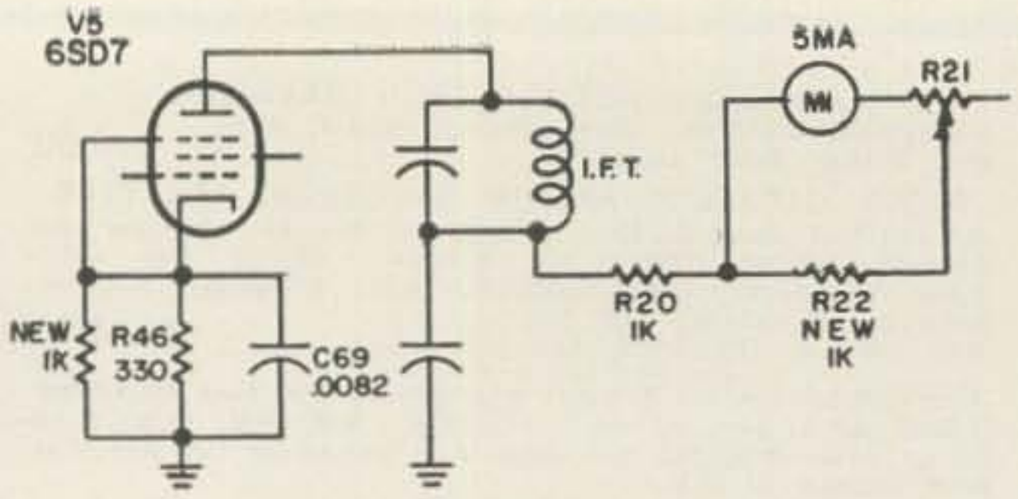

FIG. 3

TM

and B of SO-1.

3. Estimate two lengths of wire to run from the toggle switch to the pin jack. The toggle switch wire from pin A of SO-1 goes to the insulated lug of the pin jack and the other wire from the toggle switch to the ground lug of the pin jack. Solder all these leads at this time.
4. The main tuning dial, front panel, and knobs may now be reassembled.

Improvement of "S" Meter Circuit

It was found that the maximum deflection that could be had from the local broadcast signals was S-6 with the original circuitry. The following changes will improve the circuit. Refer to Fig. 3 for the revised circuit.

1. Replace the 6SK7 tube V5 with a 6SD7 tube.
2. Change the 100 ohm resistor R22 to 1000 ohms.
3. Add a 1000 ohm resistor in parallel with the 330 ohm resistor at he cathode of V5.

Audio Amplifier Modification

Refer to Fig. 4 for the revised circuit.

1. Remove the 68k resistor R39 located on the terminal board on the back chassis lip.
2. Tie a jumper wire across the two terminals where R39 resistor was removed and solder.
3. Remove the 7500 ohm 10 watt resistor R40 located in a cluster of four upright resistors under the chassis near the rear.
4. Connect the two white wires with red tracers together after removing them from R40, insulate and solder them.
5. Install a 5000 ohm to 8 ohm output transformer in the location on top of the chassis near the rear where the R41 potentiometer and bracket were removed.
6. Remove the white wire with blue tracer attached to pin 3 of 6V6 tube V9. This wire leads to a .5 mfd capacitor C52 which is a metal can type and is the bottom unit of two stacked ones near the cluster of upright mounted 10 watt resistors. This capacitor may be removed or left in, as desired, and white wire with blue tracer may be removed from the harness or clipped short and left in.
7. Install a wire from the other terminal of C52 to a lead of the 8 ohm secondary of the output transformer. (There is already a shielded wire attached to this terminal of C52, leave it there.)
8. Tie the other lead of the 8 ohm transformer secondary to any convenient ground. The white wire with black tracer which attached to the potentiometer R41 may be used for this ground.
9. Connect one wire of the output transformer primary to pin 3 of 6V6 tube V9. Do not solder.
10. Connect the other primary wire to pin 4 of 6V6 tube V9. Do not solder.
11. Remove the 100k resistor R47 connected from pin 3 of 6V6 tube V9 to a terminal

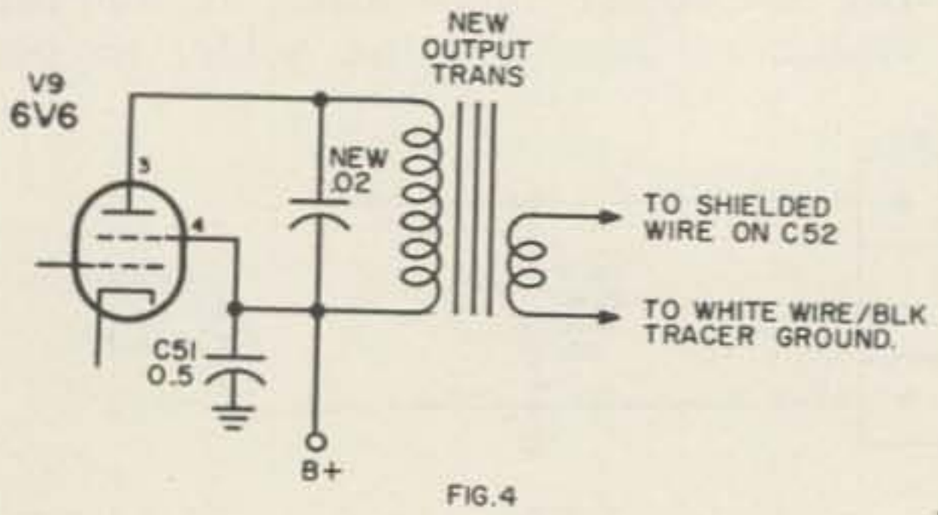

FIG. 4

TM

* TWO-WAY * COMMUNICATION CRYSTALS

UNCONDITIONALLY GUARANTEED

FAST SERVICE

American specializes in two-way communications. Frequency correlation date for G.E., Motorola, R.C.A., Collins, Lear, Narco, Hallicrafter, Link, Gonset, Aerotros, Heath, Bendix, Johnson, Globe, U.S. Gov't and many other companies. Send postage.

Frequency Range 3 to 9.9 mc	Commercial Oven 002%	Commercial Room 002%	Amateur 01% 20mmf
3 to 9.9 mc. Fund	$4.25	$3.75	$2.85
15 to 29.9 mc. T.M.	4.25	3.75	2.85
30 to 50 mc. T.M.	4.50	4.00	3.35
10 to 17 mc. Fund	4.50	4.00	3.35
2 to 2.9 mc. Fund		4.00	3.35
50 to 60 mc. F.M.	5.50	5.00	4.00
50 to 80 mc. F.M.	6.00	5.50	5.00
1.0 mc. to 2.99 mc.	8.50	7.50	6.50

C.B. .104% crystals, all channels, all equipment, $2.85
Amateur, 6 meters; 8.3 to 8.6 mc 6th multiple Trans. FT243, $1.50
Do It Yourself Kits—Three 7 mc Xtlas, Two noyders, $1.95
Write for quantity discounts or phone Victor 2-5571

AMERICAN CRYSTAL CO.
P.O.BOX 2366 • KANSAS CITY 42, MO.

FALL SURPLUS SPECIALS DE K2BBC

Read-N-Save

DB Meters 3½" rd —10 to +6db 1mw @ 600 ohms NEW $2.75
Sperti Vacuum Switches for ART-13, etc. ____NEW $1.00
M-359 Coax Right Angles ____5 for $1.00
Velvet Verniers w/large knob ____NEW $1.00
600 Ohm 300 Watt Non-inductive Resistors ____ $2.50
WE-255A Polar Relays for TTP ____ $4.50
Sockets for use with above relay ____NEW $2.50
Dummy Loads 27 to 40 mcs 30 watt A-83 ____ $1.00
Choppers Stvns Arnold #222 AC-DC 110vdc max___ $5.00
Nicad Storage Batteries 1.2v 6amp hrs. ____ $2.00
Bank of 10 batteries in plastic case (12v) ____ $17.50
Chargers for above (12v) 115ac input ____ $4.95

NEW SURPLUS TUBES GUARANTEED

2C39A	$7.50	6F4 (acorn)	$1.75	5881	$1.50
3CX100A5	$14.50	100TH	$11.00	6AN5	$1.25
6161	$35.00	250TH	$18.50	6146	$2.95
829B	$9.50	6159	$3.75	446A	$0.50

—MONEY BACK GUARANTEE ON ANYTHING WE SELL—

We stock large quantities of Military and Commercial Test Equipment. We buy AN/GRC, PRC, TRC and test equipment TS and AN/UPM or URM. What have you for sale or trade?

Dumont Scopes 256D ____$110.00
304H ____$195.00

SPACE ELECTRONICS CO.
218 West Tremont Ave., Bronx 53, N. Y.
TRemont 8-5222

807 Tubes, new ____$1.00
Removed from equipment & tested **6 for $5.00**

Sockets for 4X150A etc. ____$6.50 ea.
Eimac #SK-610 ____2/12.00

T-179/ART-26 Transmitters 300-600mc, 35w
Brand new w/tubes, for ham TV____$59.50

SP-600-JX Receivers .545-54 mc
Like new ____$425.00

Model 15 TTP complete with synch. motors. Excellent ____$225.00

Berkeley Model 5500C Universal counter & timer Lab tested—perfect____$425.00

Low Freq. Marine Receivers—RCA
3 bands 240 to 2000 kc—115vac
New condition ____$69.50

BC-463A Transmitter and Modulator converts to 6 mtrs. uses 815 tubes. New with tubes ____$19.50

Coax Relays SP3T 28vdc
General Communications 3N120RC or Thompson Products 10566. New ____$17.95

Bird Model 6250 Milliwattmeter
0-250mw, 30-500 mc, for Handi-Talkies
New ____$42.50

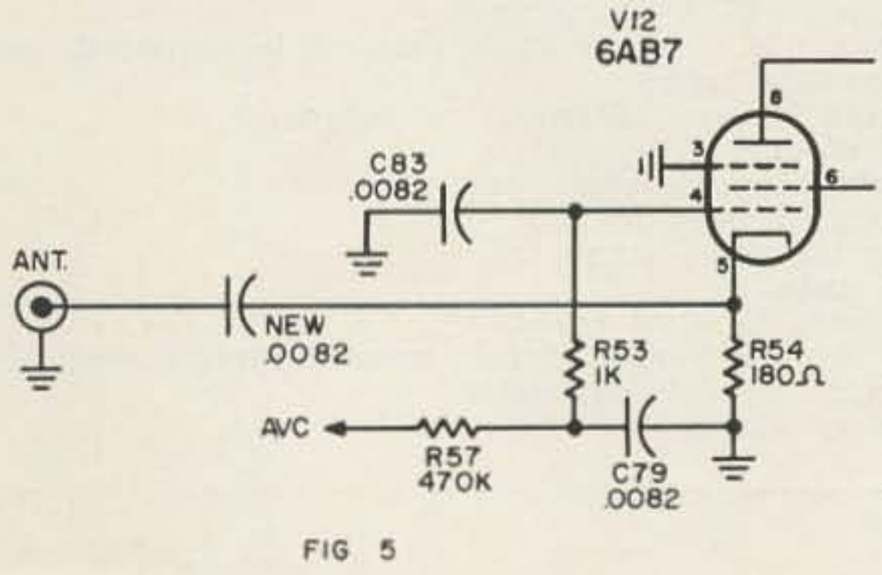

board on the rear chassis apron. Removal of this negative feedback resistor will result in greater output and better communications quality.

12. Install a .02 mfd 600 volt capacitor from pin 3 to pin 4 of 6V6 tube V9 to reduce high frequency response. Solder the connections.

Either headphones or a speaker may be connected to the PHONES jack.

Low Impedance Antenna Input Stage

Refer to Fig. 5 for the revised schematic.

1. Remove the wire lead from pin 5 to pin 3 of 6AB7 tube V12.
2. Connect a wire from pin 3 to pin 1 of this tube socket and solder.
3. Remove the .0082 mfd capacitor C79 from the terminal board on the underside of the chassis near the tube socket of V12.
4. Disconnect the center wire of the shielded antenna wire lead where it terminates at the terminal board on top of the chassis near the 6AB7 tube V12.
5. Ground the terminal from which this wire was removed.
6. Connect one end of a .0082 mfd capacitor to the free end of the wire removed in step 4 and add on a piece of wire to the other end of the capacitor, long enough to go through the chassis grommet. Connect it to pin 5 of the 6AB7 tube V12.

A typical power supply is shown in the

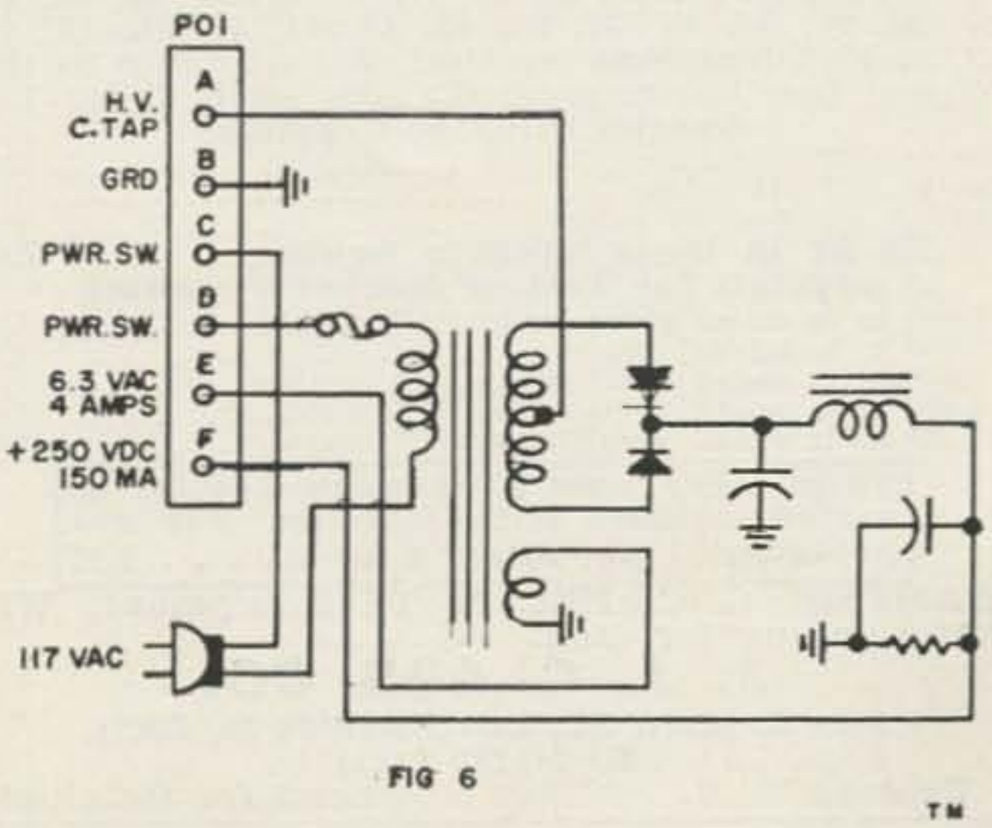

schematic of Fig. 6. No attempt is made to design an exact supply for the receiver in this article, since most users have power supplies capable of supplying adequate power to the receiver.

A white wire with blue and black tracer will be left over from the modifications. It may be cut close and left in the harness under the chassis.

A slot is cut in the cover to allow it to be slipped over the bandspread tuning knob. This shaft may be cut short enough to allow a knob to fit flush with the case cover.

A dummy knob is installed on the shaft on the front panel from which the stop mechanism was removed.

A bandspread dial is attached with cement to a ¾ inch diameter knob and installed on the tuning shaft. This dial is reproduced in Fig. 7 as a guide only because each receiver will vary slightly in calibration and the dial will have to be tailored to each case. A suitable pointer

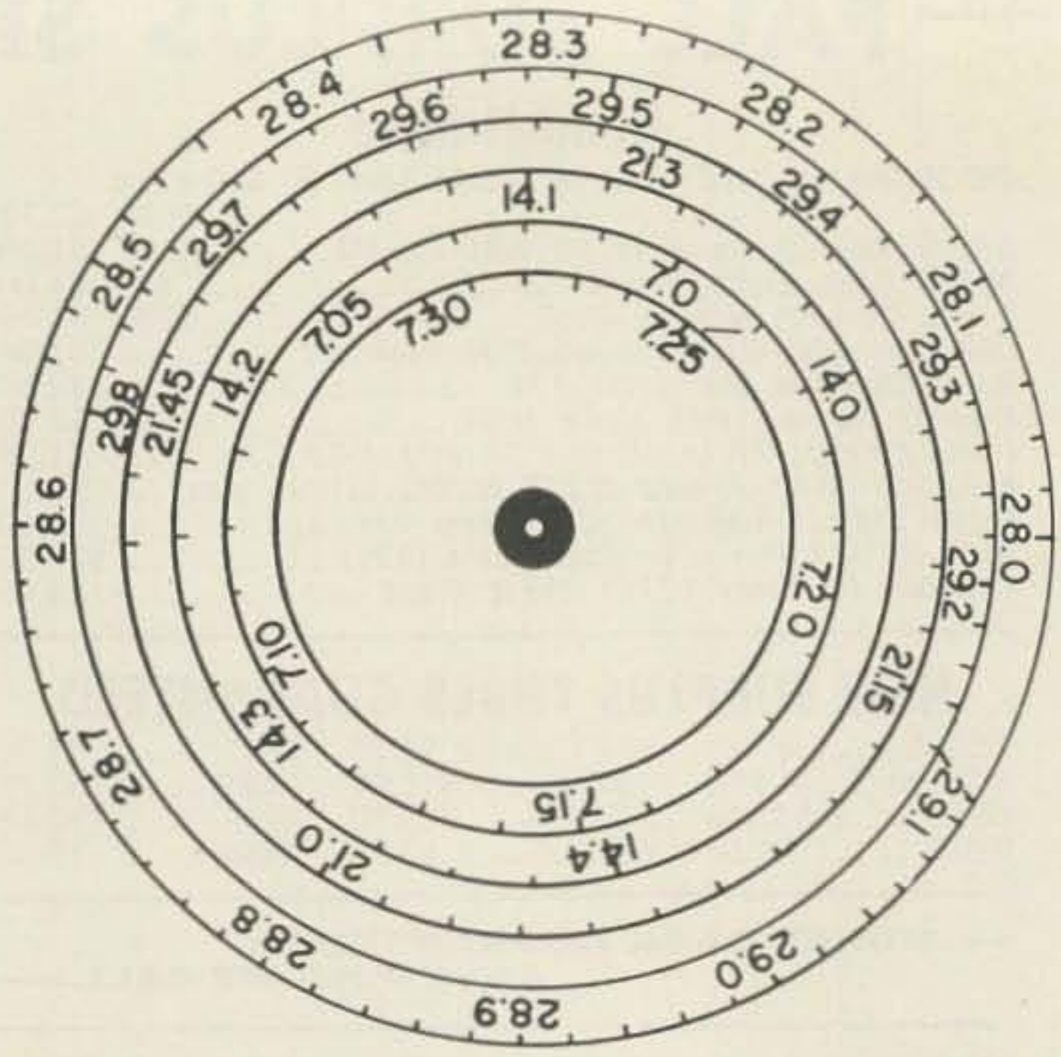

for the dial is made from a short length of solid #20 wire which is attached under the screwhead of the nameplate. . . . W5UOZ

Parts List

1—Shaft bushing for ¼ inch shaft
1—¼ inch dia. shaft approx. 4 inches long
1—shaft coupling for ¼ inch shaft
1—2 inch dia. bandspread tuning knob
1—SPST toggle switch (SEND-RCV switch)
1—Pin jack (RCA phono jack)
1—¾ inch dia. tuning knob (mount bandspread tuning dial to this knob)
1—6.3 volt 1.2 amp filament transformer
1—1N93 diode
1—10 mfd 150 volt elect. capacitor
1—500 ohm 5 watt resistor
1—3 lug terminal strip
1—6SD7 tube
2—1000 ohm ½ watt resistor
1—5000 ohm to 8 ohm output transformer, 5 watt
1—.02 mfd 600 volt capacitor
1—1 Mh rf choke

Blank Calibration Book for BC-221 freq. meter, also LM, New, boxed **Delivered $2.59**

FL-5 Filter w/own BC-345 switch **Delivered $1.69**

ART-13 Plugs U-7/U or U-9/U **Delivered $2.59 ea. Both for $4.00**

Schematics 29¢ @ 5 for a dollar—Schematics SCR-522, ID-6/APN-4, ARC-5-T/18-22, ARC-5T/23, BC-603, BC-683, ARC-5-R/25-27, BC-923, R-9/APN-4, BC-924.

Filament Transformer, UTC #FT-5, 2.5 vac 10 a. sec. 115/60/1 PRI. 1500vt, New, boxed **Delivered $2.30**

Plugs & Receptacles of all kinds, drop us a line.

SATISFACTION GUARANTEED

HIWAY COMPANY

1147 Venice Blvd., Los Angeles 15, Calif.

J. J. GLASS

THIS MONTH'S SPECIALS

CRYSTALS

Low Freq. for Sideband & Experimental Applications: 370-540 kc within ½ kc or less. Use on fundamental or harmonic. Originally used on 54th or 72nd harmonic.....49¢ each, 5 for $2.25

Sealed Overtone Crystals in small Metal Holder, ½" Spacing: 11, 12, 13, 16, 17, 18, 19, 20, 23, 25, 26, 27, 28, 31, 35, 36, 37, 38, 42, 43, 44, 45, 46, 47, 48, 49, 50 MC, fractions omitted. We will ship to the closest fraction requested....59¢ each, 3 for 1.49

Special Purpose Crystals

500 kc FT-241 holder	75¢
200 kc FT-241 holder	1.49
200 kc sealed metal holder	1.95
100 kc in large bakelite holder	**2.49**

Crystals for Test or Marker Purposes

1,000 kc in sealed metal holder ½" spacing	1.95
5,000 kc in FT-243 holder	1.95
9,000 kc in sealed metal holder ½" spacing	1.95
10,000 kc in sealed metal holder ½" spacing	1.95
13,000 kc in sealed metal holder ½" spacing	1.95

Very, Very Low Frequency Crystal in sealed holder. With fraction. For experimental purposes. 4 kc 1.95

WANTED! GRC, PRC & TS Equipment. Will swap or buy for cash.

J. J. GLASS CO.

1624 S. Main St., Los Angeles 15, Calif.
RI 9-1179 (213)

Fridays 'til 9 Send for Catalog!

A Constant-Voltage Power Supply

Roy Pafenberg W4WKM

THE subject of using salvage TV receiver transformers for amateur power supplies has been exhaustively treated in the literature, notably by W1ICP in the QST series. There is, however, a power supply used in some of the earlier Dumont television receivers that is particularly desirable.

GUARANTEED CRYSTALS!

ALL MARINE FREQ.-FT-243, DC-34 Holders. Tol. .005 ..... $2.50
POLICE, C.A.P., CD, MARS. Tol. .01% $2.00
CITIZENS BAND—11 METERS—.005% Tol.
26.965 to 27.225 MC, 3rd Over. Herm. Seal or FT-243 ..... $2.95
13.4825 to 13.6125 MC, 2nd Harm.Herm. Seal or FT-243 .. $2.95
6741.25 to 6806.25 Kc, 4th Harm. FT-243 only $2.50

SPECIAL! STOCK CRYSTALS

FT-243 Holders 5700 KC to 8700 KC in steps of 25 KC's

$1.19 ea.

SEND FOR FREE CATALOG

DC-34 Holders 1690 KC to 4400 KC steps of 10 KC ea. ...$1.19

NOVICE BAND FT-243 Fund. 1.49 ea.
80 Meter 3701-3748—Steps of 1 KC. FT-243
40 Meter 7150-7198—Steps of 1 KC. FT-243
Dbl. to 40 Meter 3576-3599. Steps of 1 KC. FT-243
15 Meter 5276-5312—7034-7083 Steps of 1 KC. FT-243

FT-243—2 Meters (Steps of 1 KC) $1.49
FT-243—6 Meters (Steps of 1 KC) $1.49
FT-243—From 3000-4000 ..... $1.49
FT-243—From 1005-2999 (Steps of 5 KC) $2.50
FT-241 SSB Low Freq. Xtals 370 to 540 KC
(Steps of 1.852 and 1.388) ..... $ .69
FT-241 SSB Matched Pairs $2.39

Include 5c per crystal for postage (U. S. Only) Calif. add 4% Tax. No C.O.D.'s. Prices subject to change. Ind. 2nd choice; substitution may be necessary. MIN. ORDER $2.50

"The House of Crystals"

U. S. CRYSTALS, Inc.

1342 S. La Brea Ave. Los Angeles 19, Calif.

2.3-5.5 Hy. CHOKE hermetically sealed, 850 ma/100 ma. 6 KVA test 12.50
TRANSFORMER pri. 115v 60 cyc. sec 2.5v 5A. 6500v test 5600v @ .004A 2.75
TRANSFORMER. pri 115v 60 cyc. Sec 5850/5400/ 5000v @ 40 ma. 3.50
TRANSFORMER, pri 105v 60 cyc. low-induction type, Sec 6V @ 22A. 75,000V test 14.00
CHOKE 1.72 Hy, 400 ma. 10KV test. Kenyon 3.75
CHOKE 2 Hy, 350 ma. 7KV test. American Xfmr 3.75
TRANSFORMER Pri 115V 60 cyc, Sec 800 VCT 250 ma. 5.1 V @ 4 A. 6.5 V @ 7.5 A. Hermetically sealed 5.00
TRANSFORMER, Pri 110 or 220 V, 60 cyc. Sec 1050 VCT @ 220 ma. 2.6 V @ 12 A. 5.2 V @ 3 A. 4.75
TRANSFORMER, Pri 115 V 60 cyc. Sec 1120 VCT @ 150 ma. 5 V @ 3 A. 6.3 V @ 3 A. 7.5 V @ 2.5 A 4.75
TRANSFORMER, Pri 115 V 60 cyc. Sec. 2.5 V @ 20 A & 2.5 V @ 20 A. 1780 V test.. 5.65
CONDENSER, Sprague, 4000 MFD 50 V .. 1.50
GOLD-PLATED VARIABLE CONDENSER, 20-245 mmf. double-spaced. 1.50

VERN'S 7701 S. Normandie Los Angeles 44, Calif.

All Orders FOB L. A. — Phone (213) PL 1-0278

TONS OF AMATEUR EQUIPMENT IN STOCK

WESTERN RADIO

SAN DIEGO

1331 India Street BE 9-0361

MON - FRI 8:30 to 8:00 SAT 8:30 to 5:00

Advertisers

Ad Com 63
Alco 55
Alden 96, 77
Algeradio 59
Allied 96
Alltronics-Howard 65, 72
American Crystal 90
Arrow 39
Arrow (Calif.) 89
B & W 41, 65
Callbook 19
CDR 29
Clegg 13
Club Sub. 34
Columbia 83
Continental 21
Cushcraft 17
C-Y 81
Densen 25
Dow Key 41, 69
Drake 33
Ebco 23
E-Z Way 7
Fair 83
Finney 17
Gavin 19
Glass 92
Gonset 14
Goodheart 89
Ham Kits 69
Hammarlund ..... Cover 3
Hallicrafters ..... Cover 2
Heath 48
Hi-Way 92
Hy-Gain 57
International Crystal 5
Irving 27
J & D 25
Jefftronics 25
KTV 87
Ladd 85
Lafayette 3
Maps 79
McCoy 37
Meshna 87
Miller 72
Mission 65
National ..... Cover 4
New Products 4
Newtronics 67
Pacific Plantronics 75
Pel 53
P & H 23
Radio Amateur Callbook 19
Radio Bookshop 73
Radio Supply & Engineering 69
Space 91
Space Raider 4
Subscription 80
Supreme 70, 71
Swan 62
TAB 95
Technical Manuals 93
Technical Materiel Corp. 47
Telco 11
Telrex 42, 81
Tri-Ex 31
Tri-State 61
U. S. Crystal 94
Vanguard 4
Verns 94
V & H 68
Waters 35
Western (Calif.) 94
Western (Neb.) 68
WRL 43, 69
73 Books 79
73 Products 76
73 Subscription 80

Some of these earlier sets used a constant-voltage transformer to offset the degradation in performance at reduced input voltage. These transformers were manufactured by Sola and were of the saturable reactor type. While they were used primarily to compensate for primary voltage variations, they also provide good regulation with changing load.

The RA-109 chassis, used in many sets marketed in 1951, is typical of those using the constant-voltage transformer. Although very fine sets, housed in good cabinets, many are being junked today and a little searching will dig them out.

The schematic diagram of the regulated supply used in the RA-109 chassis is shown in Fig. 1. Both the rectifier filament and the high voltage secondary windings of the transformer are regulated. The inductance of the high voltage secondary winding is tuned to resonance by the 2 mfd capacitor. Because of this resonant condition, a high circulating current flows in the winding, causing this section of the core to become saturated. Because of this saturation, the secondary voltage is relatively constant over a wide range of load and primary voltage variations.

Specifically, this transformer is designed to maintain the dc voltage output constant within ±2% for line voltage variations of ±10% from the rated 117 volts. This insures stable dc output for line voltages ranging between 105 and 129 volts. Only one precaution is required in amateur use of this supply. The nominal 2 mfd capacitor used to tune the secondary is hand selected in production to match the transformer used. Do not change the value of this capacitor or much of the regulating effect will be lost.

This particular supply is rated at 362 volts at 210 ma and no undue heating occurs at this load. This salvage power supply is a low cost answer to the critical voltage regulation problems encountered in many amateur applications.

. . . W4WKM

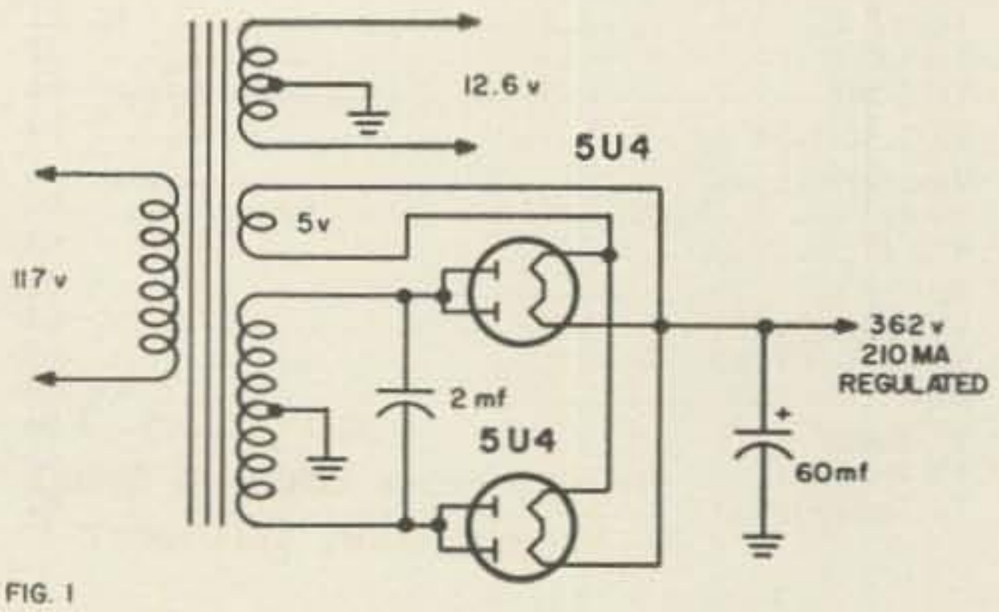

FIG. 1

Technical Manuals

TM-11-215	TS-268 Crystal rectifier set	$5.00
235	Radio set SCR-536-BC-611	5.00
242	Radio set SCR-300-BC1000	5.00
253	Padio set SZR-8-8AZ-8XX	5.00
257	Frequency shift exciter 0.39-TRA-7	6.50
277	Radio set VRC-1	5.00
283	Radio sets VRC-6-R-257-T-208	6.00
284	Radio sets GRC-3-4-5-6-7-8	7.50
285	Radio sets VRC-8-9-10	6.00
296	Radio set AN/PRC-6	5.00
297	Radio sets VRC-19-X-Y	5.00
300	Frequency meter BC-221 all models	7.50
352	TG-7 TG-37 Model 15 teletype	7.50
356	Radio teletype terminal AN/FGC-1-1C-1X	7.50
343	Keyer TG-34A	5.00
447	Keyers TG-10A through J	5.00
441	Recorder BC-1016	5.00
600	SCR-508 BC-603 BC-604	5.00
601	SCR-808 BC-923 BC-924	5.00
605	SCR-509 SCR-510 BC-620	5.00
607	Radio set VRC-2 T-322 R435	6.00
611	Radio set VRC-16-17-18	5.00
612	Radio set PRC-8-9-10	5.00
617	Radio set AN/TRC-7 RT-53	5.00
642	Radio set VRC-20-21-22	5.00
660	Introduction to Electronics	5.00
661	Electrical Fundamentals (DC)	5.00
662	Basic Theory & App. of Electron Tubes	5.00
663	Electronic Power Supplies	5.00
664	Theory & Use of Electronic Test Equip	5.00
665	CW & AM Transmitters & Receivers	5.00
666	Antennas & Radio Propagation	5.00
667	Higher Frequency Techniques (Not MIC)	5.00
668	FM Transmitters & Receivers	5.00
669	Transients & Waveforms	5.00
670	Special Purpose Oscillators & Amps	5.00
671	Cathode Ray Tubes & Their Assoc. Cirs	5.00
672	Pulse Techniques	5.00
673	Generation & Transmission of Microwaves	5.00
678	Fundamentals of Telephony	5.00
C79	Fundamentals of Carrier Repeaters	5.00
681	Electrical Fundamentals (AC)	5.00
690	Basic Theory & App. of Transistors	6.00
826	Transmitters BC-610 GRC-26	5.00
829	Radio set VRC-4 T-91 R114	6.00
839	Radio transmitters T-278 T-416	6.00
859	Receivers BC-312 BC-314 BC-342 BC-344	5.00
851	Radio set SCR244 R-274 R-320 R-483	7.50
854	Radio receiver R-388	7.50
856	Radio receiver R-390	6.50
863	Radio receiver R-391	7.50
861	Radio receiver R-392	6.50
867	Radio receiver BC-787-B-C	5.00
882	Radio receiver AN/URR-29 R-200	7.50
885	Radio receiver R-140/FSM (National HRO)	5.00
896	Radio receiver AN/FRR-12	6.50
898	Radio receiver R-108 R-109 R-110/GRC	5.00
1191	Interrogation Set AN/TPX-20	6.50
2137	Telegraph Signal Converter TA-182	5.00
	Radio set SCR-522	8.00
	Navships 92832 Transmitting set AN/URT-7	10.00
	91424 Radio set AN/PDR-27A	5.00
	91707 Oscilloscope OS-8B/U	5.00
	Navy set RBB-1 RBC-1	6.00
	Test sets TS-174	5.00
	Test sets TS-175	5.00

We Buy Manuals — Any quantity — Any subject. Send check. We pay Postage.

Technical Manuals Company

P. O. Box 406 Utica, New York

"TAB" SILICON 750MA* DIODES

Factory Tested Gtd.!

NEWEST TYPE! LOW LEAKAGE

D.C. or Batty. Derate 20%

rms/piv	rms/piv	rms/piv	rms/piv
35/50	70/100	140/200	210/300
.07	.14	.19	.29
rms/piv	**rms/piv**	**rms/piv**	**rms/piv**
280/400	350/500	420/600	490/700
.34	.44	.53	.69
rms/piv	**rms/piv**	**rms/piv**	**rms/piv**
560/800	630/900	700/1000	770/1100
.85	.98	1.08	1.50

Low Priced T300 Silicon Diodes
Rated 400 pvi/280rms @300Ma @100°C
.25 each; 30 for $7; 100 for $20;

Diode order $10 shipped Post free

ZENER DIODES 150 to 400 MW CASED TO24 Pckg. Within 20% V'Range $1, 3 for $2, 20 for $10, KIT ZENER DIODES up to 400MW, SINGLE & DOUBLE ENDED 2 for $1; 12 for $5; 100 for $36.

SILICON POWER DIODE STUDS*

Operation Up to 125°C Case Temp.

D.C. Amps	50Piv 35Rms	100Piv 70Rms	150Piv 105Rms
2	.23	.34	.42
3	.60	.85	1.10
6	.70	.95	1.15
12	.85	1.15	1.35
35	1.80	2.20	2.95
70	3.75	4.50	5.00
240	4.50	5.40	7.70
D.C Amps	**200Piv 140Rms**	**300Piv 210Rms**	**400Piv 280Rms**
2	.49	.60	.84
3	1.25	1.50	1.80
6	1.40	1.65	1.95
12	1.68	1.85	2.07
35	3.25	4.90	6.10
70	5.60	8.80	Query
240	9.00	Query	Query

*Derate 20% for Battery or Capacitive Load or D.C. Blocking!
*Stud mounted on Heat-sink

LO PRICED SILICON TUBE REPLACEMENTS WITH BUILT IN SURGE AND SERIES BALANCING PROTECTION

TYPE	VRMS/PIV	AMPS	PRICE
T866	5000/10400	0.3	$16
T5R4	1900/2800	0.5	$7

"TAB FOR TRANSISTORS & DIODES!"

Full Length Leads Factory Tested & Guaranteed! U.S.A. Mfg.

PNP Hi Power 15 Amp. TO3 & TO36 Round Pckg.
2N441, 2N277 $1.25, 4 for $4;
2N442, 2N278 $3@, 2 for $5;
2N443, 2N174 $4@, 2 for $7;
2N677 $1@, 12 for $10;
2N677A $2@, 6 for $10; 2N677B $3@, 4 for $10; 2N677C $5@; PNP 2N123, 2N107, CK722 4 for $1, 25 for $5; NPN 2N292, 2N293, PNP 2N223 ¢30@, 15 for $4, 100 for $22; PNP 2N670/300MW ¢40@, 20 for $7; PNP 2N671/1W ¢60@, 10 for $5; 2N597, 2N598, 2N599 PNP $1.50@, 4 for $5.
$10 or more this item POSTPAID U.S.A.

RND(TO36), or Diamond (TO3) mica kit 30¢ ea. Power Heat Sink Finned (80" sq.) $1.25, 5 for $5.

GTD! Power-Diamond-Transistors
Factory Tested
***MFGRD in U.S.A.
Univ. Replcmnt
2N155, 2N156, 2N234, 2N256, 2N307, 2N554
SPECIAL TO3GP .....55¢, 10 for $5
40 for $18
$10 or more this item we pay P.P./U.S.A.

Kit Glass Diodes equiv. 1N34A, 46, 48, 51, 60, 64, 87, 105, 109, 147, 267, 268, 295. 12 for $1, 100 for $7.50.

**WE BUY! SWAP & SELL
TRANSISTORS, DIODES, ZENERS**

"TAB"

THAT'S A BUY

"TAB" Tubes Factory Tested, Inspctd, Six Months Guaranteed! No Rejects! Boxed!

GOVT & MFGRS Surplus! New & Used

OA2	1.00	6J7	.99	5631	1.20
OA3	.95	6K7	.79	5656	3.00
OB2	.65	6L6	.99	5670	.89
OC3	.65	6SN7	.72	5687	.90
OD3	2/$1	6T8	.98	5725	.75
OZ4	.79	6V6GT	.70	5732	.65
1B3	.99	6X5	.49	5751	1.00
1L4	2/$1	12AT6	.59	5814	.60
1R4	5/$1	12AT7	.85	5879	2/$1
1S4	.60	12AU6	.63	5894	13.50

We Swap Tubes! What Do/U Have?

1T4	.60	12AU7	.69	2AP5	3.00
1T5	.55	12AX7	.75	3BP1A	5.00
1U4	5/$1	12AY7	.89	3KP1	6.00
1U5	.65	12BA7	.90	3SP1	3.00
1X2	.99	12BE6	2/$1	5GP1	5.00
2C39A	10.00	12H6	3/$1	5CP4A	6.00
2C40	5.00	12J5	.69	5MP1	6.00
2C43	5.50	12J7	.69	5MP4	6.00
2C51	1.25	12K8	.70	5NP1	6.00
2D21	2/$1	12SC7	3/$1	5ABP1	20.00

Send 25¢ for Catalog!

2E22	1.75	12SG7	.60	5AQP1	20.00
2E24	1.80	12SH7	.60	5AQP7	20.00
2E25	2.50	12SJ7	.60	5AP1	5.00
2E26	1.80	12SK7	.75	5ADP1	35.00
2K25	6.50	12SL7	.59	5ADP7	25.00
2V3G	2/$1	12SN7	.69	5BP1	6.00
2X2	2/$1	12SR7	.69	5BP2	6.00
3C24	3.00	24G	3.00	5BCP7	25.00
3D23	2.40	25A6	1.25	5BGP2	35.00
3E29	5.90	25L6	2/$1	5BHP2	25.00

Wanted 304TL Tubes

3Q5	.85	25T	5.00	5CP1A	7.00
4-65A	9.50	25Z5	.72	5CP5	4.00
4-125A	21.00	25Z6	.75	5CP7A	4.00
4-250A	33.00	35Z5	.85	5CP11A	5.00
4X150A	14.00	RK39	2.50	5FP1A	18.00
4X250	34.00	50L6	2/$1	5FP4A	18.00
4X500	37.00	75	.81	5FP5	3.00
5R4	1.00	83V	2/$1	5FP7A	3.00
5T4	2/$1	2000T	150.00	5FP14	3.00
5U4	.75	4X150G	12.00	5FP14A	6.00

**125°C SILICON PNP TRANSISTORS
250 to 400 MW**

***FULL LENGTH LEADS
Factory Tested & GTD!***

$5 to $11 — SMALL — TO5 & TO18 Pckg. Replaces 2N327A; 332, 3, 4, 5, 6, 7, 8; 474, 5, 6, 7, 8, 9; 2N480, 541, 2, 3; 2N935, 36, 37; 2N1034; 2N1131, 2; 1276, 7, 8, 9. "TAB" SPECIAL ¢69@, 7 for $4, 20 for $10.

$10 or more this item, we pay P.P./U.S.A.

5V4	.89	4X250B	30.00	5HP4	10.00
5Y3	.59	4-400A	33.00	5JP1	2.00
5Z3	.89	250TL	18.00	5JP2	1.00
6A7	.99	307A	3/$1	5JP14	25.00
6A8	.99	VR92	5/$1	5LP1	18.00
6AB4	2/$1	388A	2/$1	5LP1A	25.00
6AC7	.69	350A	1.00	5LP4	6.00
6AG5	.59	350B	1.00	5LP7A	6.00
6AG7	2/$1	6146	2.45	5RP1	25.00
6AK5	.69	450TH	25.00	5SP7	15.00

Wanted Test Sets and Equipment

6AL5	.59	450TL	24.00	5SP7A	21.00
6AQ5	.65	460	11.50	5QP4	8.00
6AR6	.75	707B	1.25	5UP1	6.00
6AS7	2.85	715C	10.00	5XP21	36.00
6AT6	.65	723AB	2.50	5YP1	25.00
6AU6	.70	725A	3.50	7BP1	5.00
6B8	.80	805	3.35	7BP4	5.00
6BE6	.59	807	1.10	7BP4A	5.00
6BG6	1.49	811	3.90	7BP7	2.00
6BH6	.79	811A	4.75	7BP7A	5.00

Top $$$ Paid for 304TL, 813, 811A, 812A Tubes

6BK7	.99	812	3.95	7EP4	5.00
6BL7	1.30	813	12.00	7GP4	7.00
6BX7	1.11	815	1.75	9AUP7	5.00
6BY5	1.19	829B	7.50	9JP1	5.00
6BZ6	.73	832A	5.00	9LP7	1.00
6C4	.45	833A	36.00	10BP4	6.00
6C5	2/$1	837	1.50	10KP7	11.00
6C8	2/$1	866A	1.50	12GP7	7.00
6CB6	.70	954	10/$1	12QP4	9.00
6CD6	1.49	957	10/$1	12KP4A	9.00

Top $$$ Paid for 304TL Tubes!

6E5	.79	991	5/$1	12SP7	11.00
6F4	1.85	1619	5/$1	14EP4	10.00
6F5	2/$1	1620	1.00	16GP4	12.00
6F6	2/$1	1625	3/$1	16DP4A	12.00
6F8	.74	1626	12/$1	17AVP4	14.00
6H6	4/$1	1629	4/$1	17AP4	14.00
6J4	1.72	2050	1.20	17CP4	14.00
6J5	2/$1	5517	2/$1	17KP4	14.00
6J6	2/$1	5608	3.95	19DP4	16.00

"TAB" **TERMS: Min Order $5—25% with order F.O.B. New York. Ten day guarantee, prise of mdse. only. Our 18th year.**

Prices shown are subject to change.

1111MG Liberty St., N. Y. 6, N. Y. • RE 2-0245

"TAB" FOR THE BEST KITS!

Each "TAB" Kit Contains The Finest Selection!!!!

Kit 65	Tubular Cohdensers
Kit 35	Precision Resistors
Kit 10	Switches
Kit 75	Resistors ½/1&2W
Kit 12	Electrolytic Cond's
Kit 15	Volume Controls
Kit 500	Lugs & Eyelets
Kit 10	Bathtub Oil Cond's
Kit 5	'lbs. Surprise Package
Kit 10	Transmit Mica Cond's
Kit	Glyptal & Cement
Kit 3	Phone/Patch X'mrs
Kit 6	Insltd Tuning Tools
Kit 4	"Suneells" Asstd.
Kit 5	Sub-Min Tubes
Kit 75	Mica Condensers
Kit 8	Crystal Diodes
Kit 200ft	Hook Up Wire
4 Rolls,	50ft/ea. Asstd. Color
Kit 100	Ceramic Condensers
Kit 5	FT243 Xtal Holders
Kit 4	Microswitches
Kit 8	Xtal Osc-Blanks
Kit 4	Asstd Rectifiers
Kit 100	Self/Tap Screws
Kit	Adj Wire Striper & Cut
Kit	Hi Gain Xtal Mike
Kit 6	ea Phonoplugs & Jacks
Kit 2	pair SO239 & PL59
Kit 12	Binding Posts Asstd

99¢

Order Ten Kits—We Ship Eleven!!!
ONE EACH ABOVE KIT ONLY.....

TWO 866A's and FILAMENT XFMR 10 Kv Insltd SPECIAL $6

Transistor Power CONVERTER

2VDC to 500VDC up to 200MA

100 Watts; Tap @ 250VDC

DB500 $33

12VDC to 250VDC up to 150MA
Type C1225E $30

***Leece Neville Charger Systems
Sealed Silicon Stud Rectifier
Finned Stack, Direct Replacement***
FOR 6 or 12VDC @ 100A.
Type YJ9 $18

"TAB" BARGAINS

New Variacs/or equiv 0-135V/7.5A $15.30
New Variacs/or equiv 0-135V/3 Amp $10.65
DC-METER Dejur 800 Ma/2½" $3@.
DC MTR 100Ma/2½" .....$3@.
RF-MTG GE/475 Ma & 5 Amp $4@, 2/$7
DC-METER One Ma/4" Rd...$5@, 2/$8
SNOOPERSCOPE TUBE 2"...$5@, 2/$9
MINI-FAN 6 or 12VAC/60 Cys $2@, 3/$5
Xmitting Mica's .006 @ 2500V, 5 for $1.00
4x150 Ceramic/LOKTAL .....2 for $1.00
866A Xfmr. 2.5V/10A/10KV Insl...$3.95
Microswitch B1/SPNC/30 Amp 49¢@.
Tube Clamps Birtcher.....5 for $1.00
.012 at 25Kv CD Condenser....$4@.
WE Choke 4Hy/450Ma/27 Ohms $4@.
Line Filter 50Amp/250VAC...$10@.
Line Filter 200Amp/130VAC..$18@.
Bruning Parallel 6" Rule....69¢@.
KS15138 Linear Sawtooth Pot..2 for $1.00
"CTC" Delay Line 1 Microsec'd $1@, 3/$2
Vacuum Condsrs 50Mmfd/7.5Kv.$3@.

D.C. Power Supply 115V/60 to 800 Cys. Output 330 & 165 VDC up to 150 MA. Cased SPECIAL $5.

SELENIUM F. W. BRIDGE RECTIFIERS

	DC AMP	18VAC 14VDC	35VAC 28VDC	72VAC 54VDC	130VAC 100VDC
One Year Gtd!	½	$1.00	$1.90	$3.85	$5.00
	1	1.30	2.00	4.90	8.15
	2	2.15	3.00	6.25	11.10
	3	2.90	4.00	8.60	13.45
	6	4.15	8.00	18.75	31.90
	10	6.10	12.15	26.30	41.60
	12	7.75	14.90	30.95	43.45
	20	12.85	24.60	*Write For*	
	24	15.00	29.45	*Rectifier Catalog*	

Send 25¢ for New Catalog

POTLUCK SEMICONDUCTOR KITS
(NO OPENS OR SHORTS)
SILICON STUD-DIODES ASSTD.
2 to 6 Amp.....6 for $1
TRANSISTORS TO5 GERMANIUM
PNP .....6 for $1
TRANSISTORS TO5 GERMANIUM
NPN .....4 for $1
TRANSISTORS SILICON up to
400MW/PNP .....3 for $1
SILICON DIODES up to 750Ma..18 for $1
ZENER DIODES up to 10 Watts..4 for $1
$10 or more this item, we pay P.P./U.S.A.

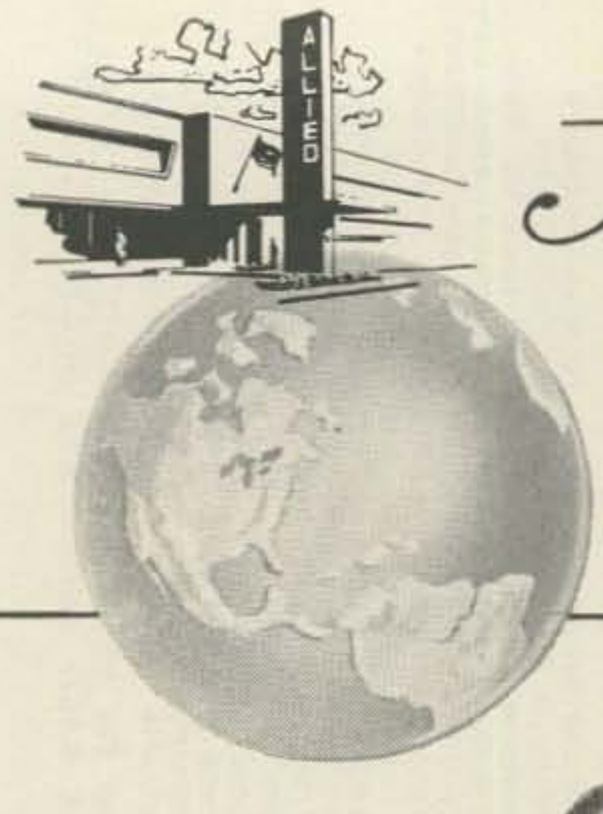

Holiday Greetings

to all our Ham Friends the world over

from the **ALLIED** *Ham Shack*

W9WHF
Jim Sommerville
(Ham Division Manager)

W9NNR
Ron DeMarco
(Trades & Tech Help—Mail or Phone)

W9QBB
Tasker Day
(Ham Shack)

K9LOK
John Chass
(Ham Shack)

W9HLA
Joe Gizzi
(Ham Shack)

K9WLB
Lou Green
(Ham Shack)

K9KVQ
Rodger Nordlund
(Ham Shack)

In Milwaukee
W9NGV
Lowell Warshawsky

In Milwaukee
W9VOB
Burt Fischel

In Milwaukee
WN9AWB
Neil "Bud" Cain

and from all the gang (over 60-strong) at Allied

W9CCW	R. Ackermann
W9VQD	J. Baird
K9AVU	Marcell Bell
W9WOV	George Bercos
K9KWY	Sherwin Berger
K9MDM	Theodore Bleiman
W9BUD	Larry Blostein
K9CDJ	Joel Bolker
W9THG	Leo Borek
K9WZE	Gordon A. Cooley
WN9CNV	Pauline Course
W9TTQ	Gerald Dahl, Jr.
W9SFW	Lou Dezettel
K9GSB	Norman Eastman
K9GSA	Norman Eastman, Jr.
K9OEP	William Eiland
W9DCB	Milton Fojtik
W9FDI	Marvin Garber
K9OAL	Dave Gunzel
WAØEBO	Brian Harris
K9GTK	Thomas Ivas
K8ZRA	Lee Jackson
WN9BTL	Don Janis
W9BBH	R. E. Jankauski
K9GHI	William Johnson
KØBYU	Charles Kaiser
WA9ACE	Arnold Klein
W9VHI	Don Kobiljak
W9ARB	Nort Lang
WN9EVD	Leslie Levin
K9TTF	Mike Levine
W3LXC	Leon Lutz
K8YUK	James Marker
W9RND	Jack Matin
K9KWT	Robert Oatley
WA9DNW	Tom Orzech
K9ZWK	Emmett Paschke
W9ENK	Robert Patejunas
W9UWM	Cliff Ratliff
K8HAH	Fred Rekich
W9NPF	Donald Rossi
W9KUV	Seymour Sabitt
K9EIL	Don Saxon
W9VES	Phil Simmons
K9KBM	Dave Sims
W9OCG	Rich Stiebel
K9OKD	Wayne Strahl
K9SRW	David Thornburg
K9BDF	Jay Thomas
W9ZJU	"Doc" Towler
W9YPC	Charlie Vaughn
K9HOB	Don Wisniewski
K9IOU	Thomas Weismantel
K9GXK	Jack Wolfson

serving the Amateur since 1921

ALLIED RADIO

100 N. WESTERN AVE., CHICAGO 80, ILL.

HK-1B
$39.95

HQ-170A
$369.00

Santa's Choice!

HX-50
$399.50

Merry Christmas

FROM THE GANG AT **HAMMARLUND**
MANUFACTURING COMPANY
A Giannini Scientific Company
53 West 23rd Street, New York 10, N.Y.
And Factory, Mars Hill, North Carolina

Free Equipment Guide helps you

Choose the Best in Amateur Equipment ...NATIONAL

NATIONAL ONE YEAR GUARANTEE

NCX-3 Tri-Band SSB Transceiver; $369

NC-303 High Performance Ham Band SSB Receiver; $449

NC-105 Low Priced General Coverage Receiver; $119.95

Write for big fact-filled Equipment Guide giving full details of National's entire line of up-to-the-minute communications gear. Tells you all about the new NCX-3 Tri-Band Transceiver . . . the 80, 40 and 20 meter SSB rig with *200* watts of SSB sock together with break-in CW, AM facilities, VOX, S meter, SSB AGC, filter SSB generation . . . and all the other features you want and need for high performance amateur operation at home or in your car . . . at a price you can afford.

This new guide also features National's famous NC-303 SSB/AM/CW Receiver. This versatile receiver has the widest selectivity and frequency range of any ham-band SSB receiver, together with remarkable sensitivity and stability. The NC-303 includes more important operating features for all modes of operation than any other ham-band receiver on the market.

One of six general coverage receivers described in full detail is the modestly priced NC-105. Designed specifically to provide the beginning amateur with a receiver within his budget, the NC-105 has the important features he needs; even a Q multiplier, S meter and product detector! The NC-105 is ideal for the novice or short wave listener or as a second receiver for the more advanced ham shack.

WRITE FOR FREE COPY OF NEW NATIONAL EQUIPMENT GUIDE

- Complete technical details and features of all National gear
- Tells all about National's exclusive One Year Guarantee
- Helps you choose the right equipment for your needs

NC®

A Wholly Owned Subsidiary of National Company, Inc.

Export: Ad Auriema Inc., 85 Broad St., N. Y. C.

Canada: Tri-Tel Assoc. Ltd., 81 Sheppard Ave. W., Willowdale, Ontario

National Radio Company 37 Washington Street Melrose, Massachusetts

Rush me a free copy of your new Equipment Guide

Name.....

Address.....

City.....State.....